Pioneer sound.vision.soul

PION-07009

Service Manual

TOYOTA

ORDER NO.
CRT3155

LEXUS GX470
AUDIO SYSTEM
HEAD UNIT

VEHICLE	DESTINATION	PRODUCED AFTER	TOYOTA PART No.	ID No.	PIONEER MODEL No.
LEXUS GX470	U.S.A., CANADA	November 2003	86120-60491	P6840	FX-MG8527ZT-03/UC
			86120-60491	P6840	FX-MG8527ZT-93/UC
			86120-60481	P6841	FX-MG8727ZT-03/UC
			86120-60481	P6841	FX-MG8727ZT-93/UC

Manufactured for TOYOTA
by PIONEER CORPORATION

PUB. NO. CRT3155

- **This service manual should be used together with the manual(s) listed below.**
  For the parts numbers, adjustments, etc. which are not shown in this manual,refer to the following manual(s).

Model No.	Order No.	Mech. Module	Remarks
FX-MG8527ZT/UC	CRT2901		
CX-951	CRT2872	G2	CD Mech. Module:Circuit Description, Mech.Description, Disassembly
CX-1011	CRT2406	3L	Cassette Mech. Module:Mech.Description, Disassembly

EXPLODED VIEWS AND PARTS LIST

EXTERIOR (Page 8)

● EXTERIOR

Mark No. Symbol and Description	Part No.	
	FX-MG8527ZT/UC	FX-MG8527ZT-03/UC FX-MG8527ZT-93/UC
22 Main Unit	CWM8064	CWM9245
66 Grille Unit	CXC2097	CXC2513
68 Door	CAT2300	CAT2484

Mark No. Symbol and Description	Part No.	
	FX-MG8727ZT/UC	FX-MG8727ZT-03/UC FX-MG8727ZT-93/UC
22 Main Unit	CWM8582	CWM9244
66 Grille Unit	CXC2096	CXC2512
68 Door	CAT2295	CAT2483

ELECTRICAL PARTS LIST(Page 54)

Main Unit

Symbol and Description		Part No.	
		FX-MG8527ZT/UC	FX-MG8527ZT-03/UC FX-MG8527ZT-93/UC
L501	Inductor	Not used	LCYBR12J2125
L502	Inductor	Not used	LCYBR12J2125
L503	Inductor	Not used	LCYBR12J2125
L504	Inductor	Not used	LCYBR12J2125
R1		RS1/16S0R0J	Not used
R2		RS1/16S0R0J	Not used
R3		Not used	RS1/16S0R0J
R4		Not used	RS1/16S0R0J
R551		RS1/16S0R0J	Not used
R552		RS1/16S0R0J	Not used
C501		Not used	CCSRCH220J50
C502		Not used	CCSRCH220J50
C528		Not used	CKSQYB103K50

Main Unit

Symbol and Description		Part No.	
		FX-MG8727ZT/UC	FX-MG8727ZT-03/UC FX-MG8727ZT-93/UC
L501	Inductor	Not used	LCYBR12J2125
L502	Inductor	Not used	LCYBR12J2125
L503	Inductor	Not used	LCYBR12J2125
L504	Inductor	Not used	LCYBR12J2125
R1		RS1/16S0R0J	Not used
R2		Not used	RS1/16S0R0J
R4		Not used	RS1/16S0R0J
R551		RS1/16S0R0J	Not used
R552		RS1/16S0R0J	Not used
C501		Not used	CCSRCH220J50
C502		Not used	CCSRCH220J50
C528		Not used	CKSQYB103K50

PACKING(FX-MG8527ZT-93/UC, FX-MG8727ZT-93/UC)

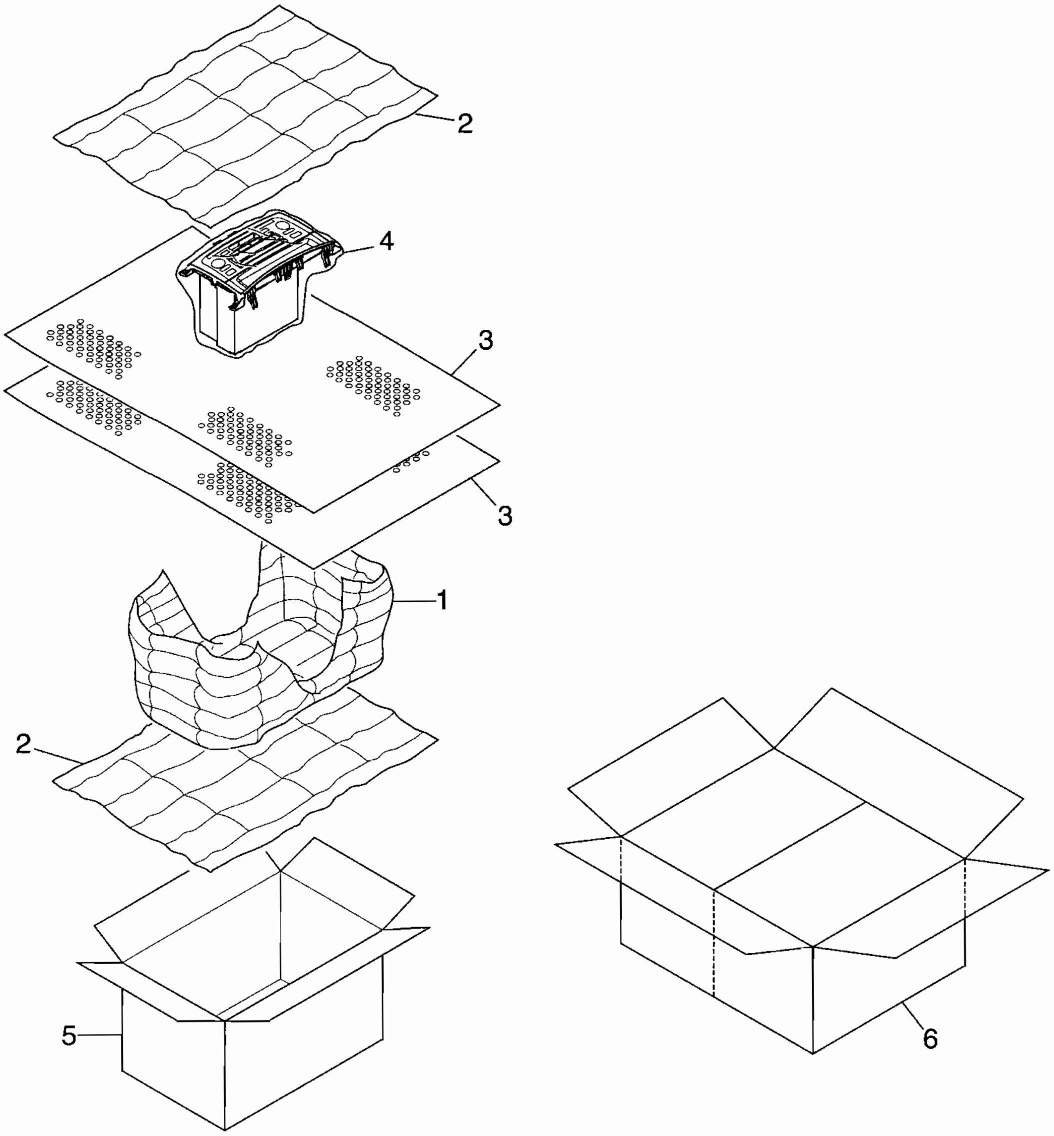

NOTE:

- Parts marked by "*" are generally unavailable because they are not in our Master Spare Parts List.
- Screws adjacent to ∇ mark on the product are used for disassembly.
- For the applying amount of lubricants or glue, follow the instructions in this manual.
  (In the case of no amount instructions, apply as you think it appropriate.)

● PACKING SECTION PARTS LIST

Mark	No.	Description	Part No.
*	1	Air Cap	CHW1945
*	2	Air Cap	CHW1948
	3	Cover	CEG1045
	4	Cover	CEG1325
	5	Carton	CHG4861
	6	Contain Box	CHL4861

BLOCK DIAGRAM AND SCHEMATIC DIAGRAM
OVERALL CONNECTION DIAGRAM(GUIDE PAGE)

Page 20 Address 2-B

Page 21 Address 8-B

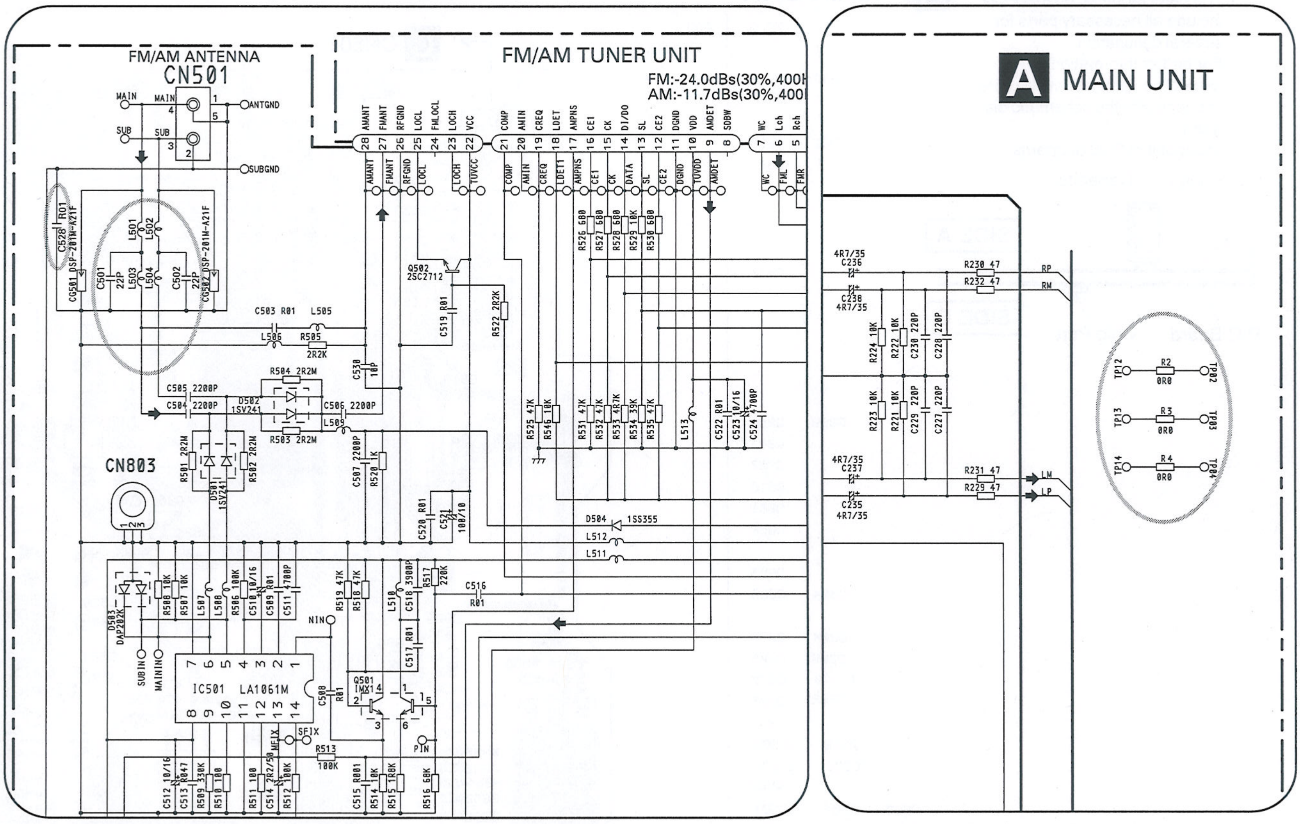

A
B
C
D
E
F

PCB CONNECTION DIAGRAM

MAIN UNIT(Page 40)

NOTE FOR PCB DIAGRAMS

1. The parts mounted on this PCB include all necessary parts for several destination.
   For further information for respective destinations, be sure to check with the schematic diagram.
2. Viewpoint of PCB diagrams

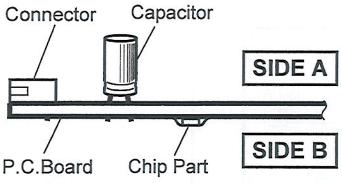

AF MAIN UNIT

IC, Q | ADJ

Q811 Q810
Q812
Q822 Q816
Q821
Q817
Q809 Q860
Q801
Q807
Q815
Q861
Q862
Q863
Q304 Q825
Q204 Q808
Q806 Q305
IC870 Q870
Q802 Q205
Q819
Q818 IC303
IC201 IC203
Q820
Q805 Q563 IC501
IC304 IC204 Q501
IC302
IC202 Q564
Q351
Q562
IC562
IC701
Q722 Q497
IC711 IC401
Q404
Q721 Q561
Q644 Q252 Q406
Q645 Q403 VR561
IC602 Q405
IC601
Q402
IC561
Q401
IC252
IC604
Q606

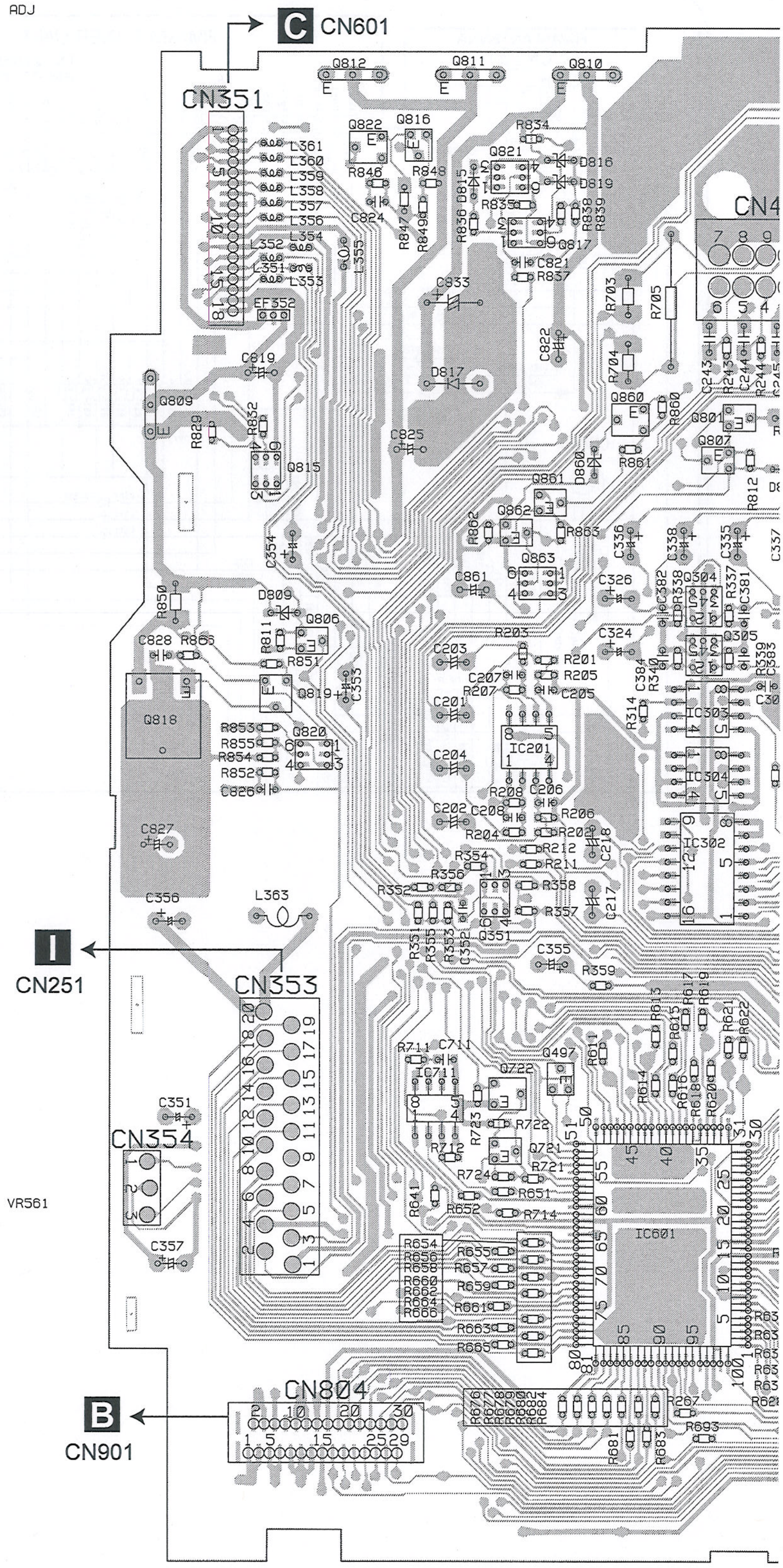

AF

A

SIDE A

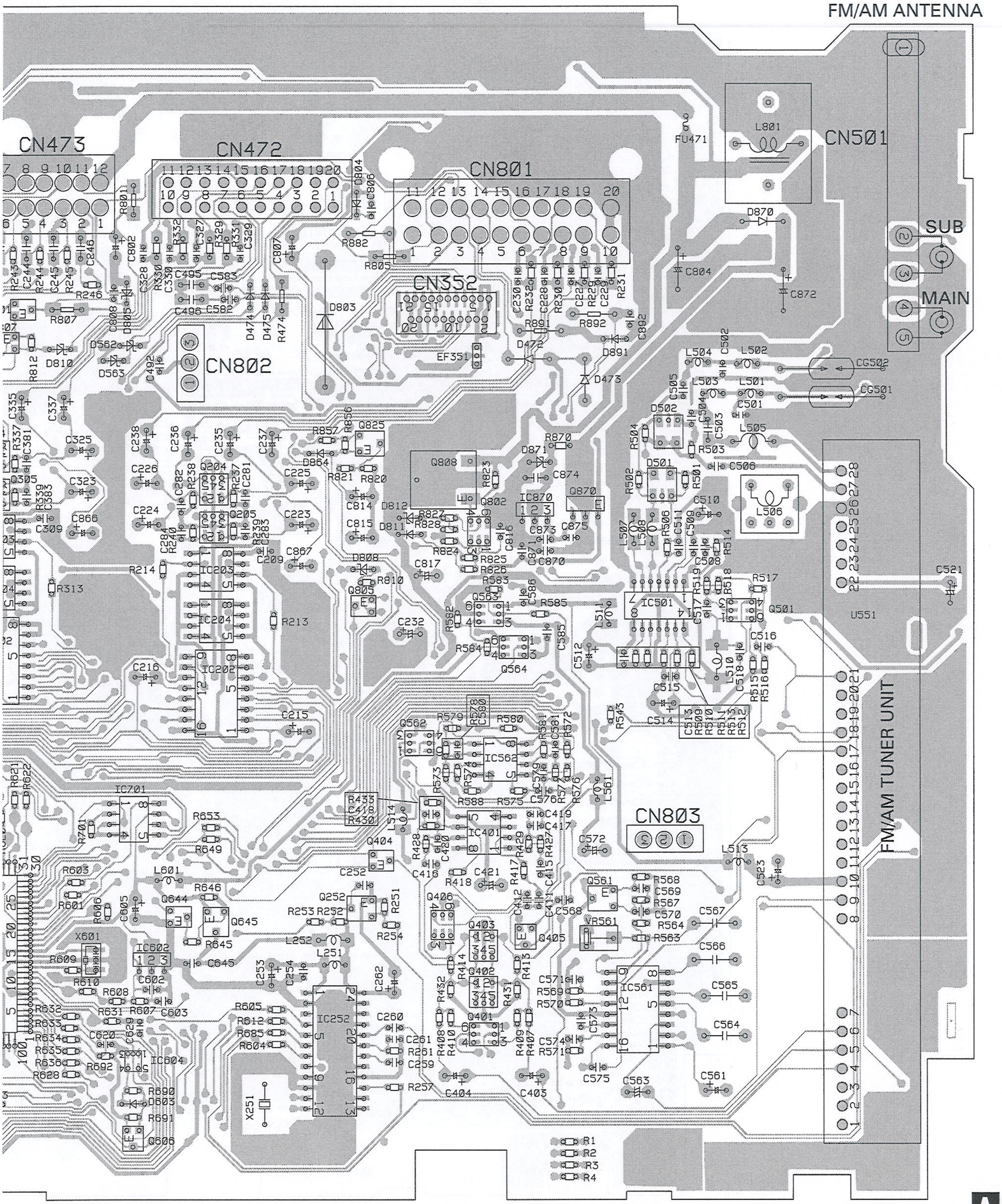

B C D E F

A

AF MAIN UNIT

B

C

D

E

F

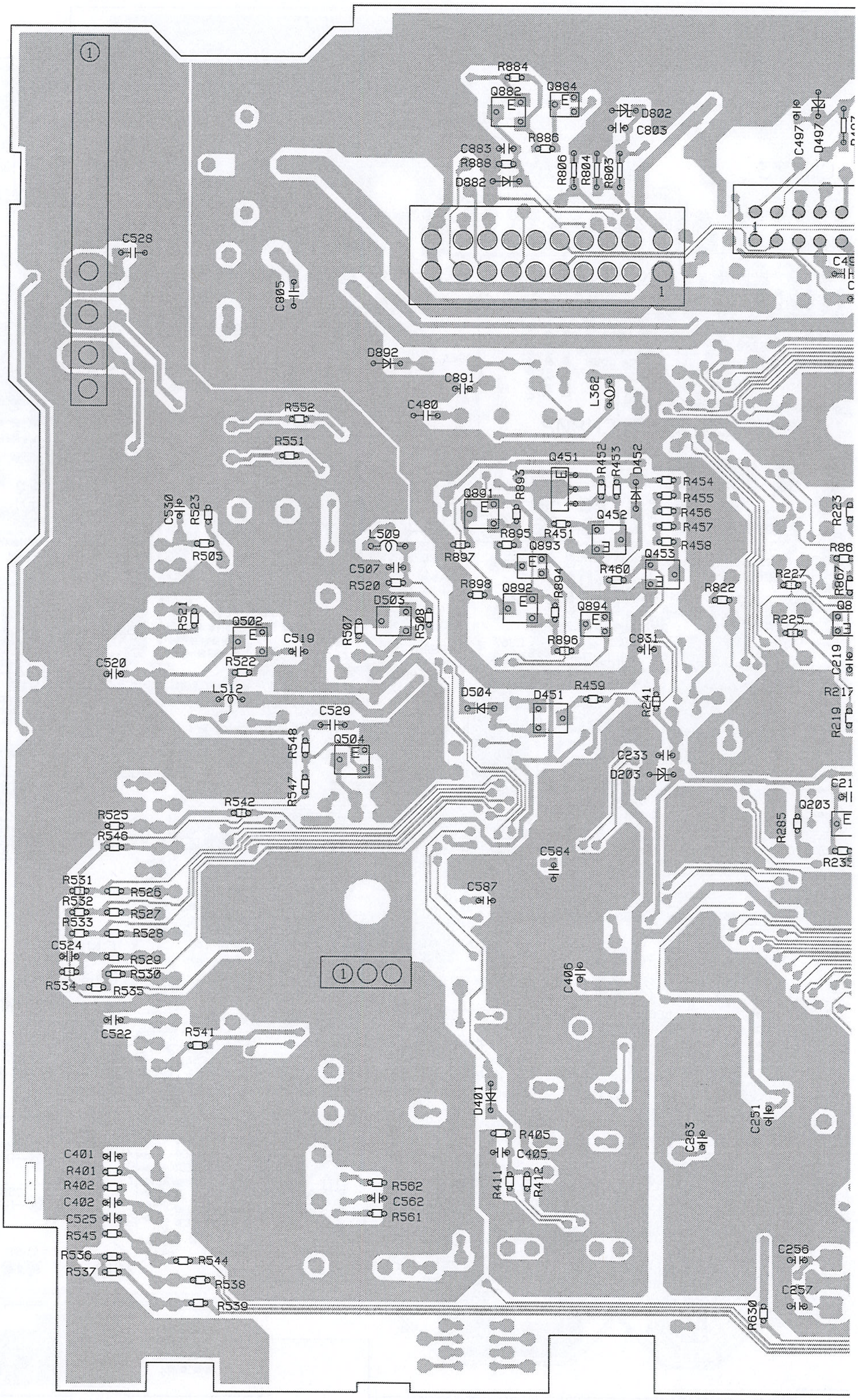

AF

A

SIDE B

B

C

D

E

F

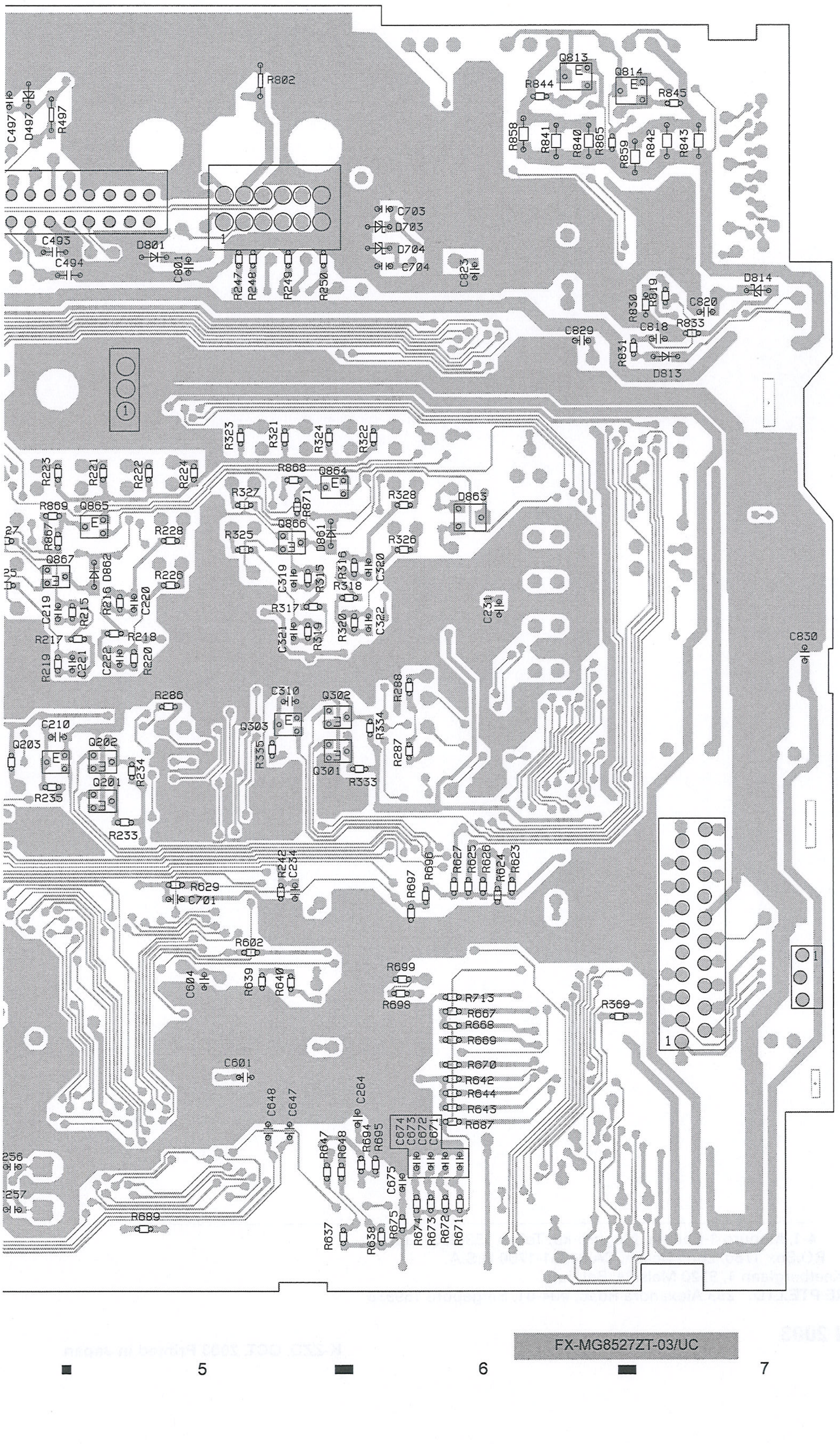

IC, Q

Q813
Q882 Q884
Q814

Q451

Q891
Q452 Q864

Q893 Q453
Q866 Q865
Q892
Q894 Q867
Q502

Q504 Q302

Q303
Q203 Q202
Q301
Q201

AF

PIONEER CORPORATION 4-1, Meguro 1-Chome, Meguro-ku, Tokyo 153-8654, Japan
PIONEER ELECTRONICS (USA) INC. P.O.Box 1760, Long Beach, CA 90801-1760 U.S.A.
PIONEER EUROPE NV Haven 1087 Keetberglaan 1, 9120 Melsele, Belgium
PIONEER ELECTRONICS ASIACENTRE PTE.LTD. 253 Alexandra Road, #04-01, Singapore 159936

© PIONEER CORPORATION 2003

K-ZZD. OCT. 2003 Printed in Japan

Pioneer sound.vision.soul

PION-06466

Service Manual

TOYOTA

ORDER NO.
CRT2901

LEXUS GX470 AUDIO SYSTEM HEAD UNIT

VEHICLE	DESTINATION	PRODUCED AFTER	TOYOTA PARTS No.	ID No.	PIONEER MODEL No.
LEXUS GX470	U.S.A., CANADA	November 2002	86120-60490	P6822	FX-MG8527ZT/UC
LEXUS GX470	U.S.A., CANADA	November 2002	86120-60490	P6822	FX-MG8527ZT-91/UC
LEXUS GX470	U.S.A., CANADA	November 2002	86120-60480	P6821	FX-MG8727ZT/UC
LEXUS GX470	U.S.A., CANADA	November 2002	86120-60480	P6821	FX-MG8727ZT-91/UC

Manufactured for TOYOTA
by PIONEER CORPORATION

PUB.NO.CRT2901

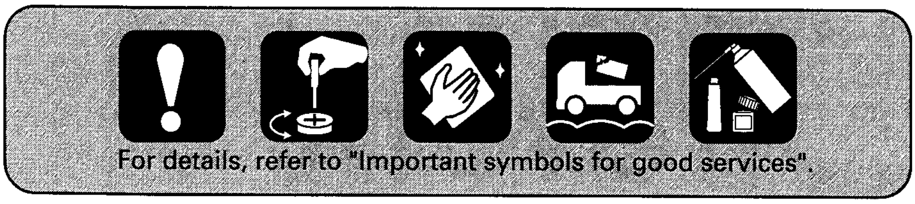

FX-MG8527ZT/UC (P6822)

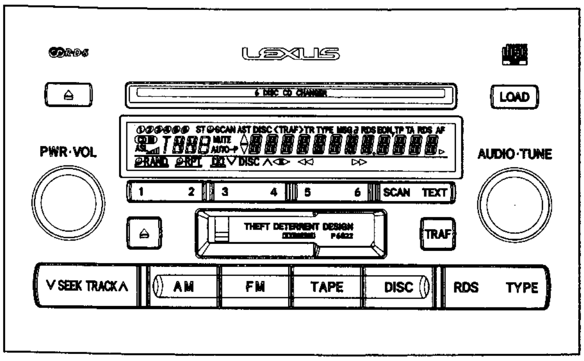

FX-MG8727ZT/UC (P6821)

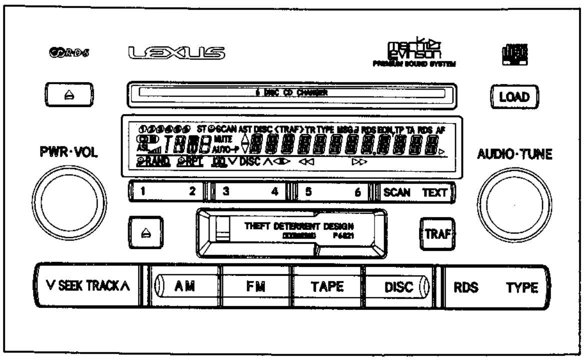

This service manual should be used together with the following manual(s):

Model No.	Order No.	Mech.Module	Remarks
CX-951	CRT2872	G2	CD Mech. module: Circuit Description, Mech. Description, Disassembly
CX-1011	CRT2406	3L	Cassette Mech. module: Mech. Description, Disassembly

●Dolby noise reduction manufactured under license from Dolby Laboratories Licensing Corporation. "Dolby" and the double-D symbol are trademarks of Dolby Laboratories Licensing Corporation.

SAFETY INFORMATION

● CD section precaution !

1. Before disassembling the unit, be sure to turn off the power. Unplugging and plugging the connectors during power-on mode may damage the ICs inside the unit.
2. To protect the pickup unit from electrostatic discharge during servicing, take an appropriate treatment (shorting-solder) by referring to "the DISASSEMBLY" on page 82.
3. After replacing the pickup unit, be sure to check the grating. (See page 72)

This service manual is intended for qualified service technicians; it is not meant for the casual do-it-yourselfer. Qualified technicians have the necessary test equipment and tools, and have been trained to properly and safel\ repair complex products such as those covered by this manual.
Improperly performed repairs can adversely affect the safety and reliability of the product and may void the warranty If you are not qualified to perform the repair of this product properly and safely, you should not risk trying to do sc and refer the repair to a qualified service technician.

[Important symbols for good services]
In this manual, the symbols shown-below indicate that adjustments, settings or cleaning should be made securely.
When you find the procedures bearing any of the symbols, be sure to fulfill them:

1. Product safety

You should conform to the regulations governing the product (safety, radio and noise, and other regulations), and should keep the safety during servicing by following the safety instructions described in this manual.

2. Adjustments

To keep the original performances of the product, optimum adjustments or specification confirmation is indispensable. In accordance with the procedures or instructions described in this manual, adjustments should be performed.

3. Cleaning

For optical pickups, tape-deck heads, lenses and mirrors used in projection monitors, and other parts requiring cleaning, proper cleaning should be performed to restore their performances.

4. Shipping mode and shipping screws

To protect the product from damages or failures that may be caused during transit, the shipping mode should be set or the shipping screws should be installed before shipping out in accordance with this manual, if necessary.

5. Lubricants, glues, and replacement parts

Appropriately applying grease or glue can maintain the product performances. But improper lubrication or applying glue may lead to failures or troubles in the product. By following the instructions in this manual, be sure to apply the prescribed grease or glue to proper portions by the appropriate amount.For replacement parts or tools, the prescribed enes should be used.

CONTENTS

SAFETY INFORMATION 3
1. SPECIFICATIONS 6
2. EXPLODED VIEWS AND PARTS LIST 7
  2.1 PACKING(FX-MG8527ZT-91/UC,MG8727ZT-91/UC) 7
  2.2 EXTERIOR 8
  2.3 CD MECHANISM UNIT(1) 10
  2.4 CD MECHANISM UNIT(2) 12
  2.5 CASSETTE MECHANISM MODULE 14
3. BLOCK DIAGRAM AND SCHEMATIC DIAGRAM 17
  3.1 BLOCK DIAGRAM(1) 17
  3.2 BLOCK DIAGRAM(2) 18
  3.3 OVERALL CONNECTION DIAGRAM(GUIDE PAGE) 20
  3.4 KEYBOARD UNIT 26
  3.5 CD MECHANISM MODULE(GUIDE PAGE) 28
  3.6 CASSETTE MECHANISM MODULE 38
4. PCB CONNECTION DIAGRAM 40
  4.1 MAIN UNIT 40
  4.2 KEYBOARD UNIT 44
  4.3 CD MECHANISM MODULE 46
  4.4 CASSETTE MECHANISM MODULE 52
5. ELECTRICAL PARTS LIST 54
6. ADJUSTMENT 64
  6.1 CONNECTION DIAGRAM 64
  6.2 AUDIO, TUNER ADJUSTMENT 67
  6.3 TEST MODE 69
  6.4 CD ADJUSTMENT 70
  6.5 CHECKING THE GRATING AFTER CHANGING THE PICKUP UNIT 72
  6.6 TEST MODE(CD) 74
  6.7 AVC-LAN DIAGNOSIS MODE 78
7. GENERAL INFORMATION 82
  7.1 DIAGNOSIS 82
  7.1.1 DISASSEMBLY 82
  7.1.2 PCB LOCATIONS 87
  7.1.3 CONNECTOR FUNCTION DESCRIPTION 88
  7.2 PARTS 89
  7.2.1 IC 89
  7.2.2 DISPLAY 96
  7.3 EXPLANATION 97
  7.3.1 SYSTEM BLOCK DIAGRAM 97
  7.3.2 OPERATIONAL FLOW CHART 98
  7.4 NOTES ON SERVICING 99
  7.4.1 CLEANING 99
  7.4.2 FACTORY SETTINGS 99
8. OPERATIONS 100

COMPACT disc DIGITAL AUDIO TEXT

1. SPECIFICATIONS

General

Power source . . . . . 13.2V(10.5V–16.0V allowable) DC
Grounding system . . . . Negative type
Backup current. . . . . 0.3mA or less
Dimensions . . . . 226(W) x134(H) x194(D)mm
Weight 2.6kg

Cassette player

Tape . . . . .Compact cassette tape(C30-C90)
Tape speed. . . .4.76cm/sec.(+0.14cm/sec., -0.05cm/sec.)
Wow and flutter . . . . 0.2% or less(WRMS)
Crosstalk. . . . . 40dB or less
Stereo Separation . . . . 30dB or more
S/N . . . . 40dB or more
Distortion. . . . . 3% or less

CD player

System. . . . . Compact disc audio system
Usable discs . . . . Compact disc
Signal format. . . . . .Sampling frequency : 44.1kHz
. . . . .Number of quantization : 16;linear
S/N . . . . 65dB or more
Distortion. 0.3% or less

FM tuner

Frequency range . . . . 87.75, 87.9–107.9 MHz
S/N. . . . . 46dB or more(54dBμ input)
Distortion. . . . . 1.5% or less
IF interference . . . . 80dB or more
Image interference. . . . . 35dB or more
Stereo Separation . . . . .25dB or more(1kHz)

AM tuner

Frequency range. . . . . 530–1,710 kHz
S/N 20dB usable sensibility . . . . 34dBμ or less
S/N . . . . 42dB or more
Distortion. . . . . 1.5% or less
IF interference . . . . 55dB or more
Image interference. . . . . 45dB or more

2. EXPLODED VIEWS AND PARTS LIST

NOTES : • *Parts marked by " * " are generally unavailable because thcy are not in our Master Spare Parts List.*
• *Screw adjacent to ▽ mark on the product are used for disassembly.*
• *For the applying amount of lobricants or glue, follow thc instructions in this manual.*
(In the case of no amount instructions, apply as you think it appropriate.)

2.1 PACKING(FX-MG8527ZT-91/UC,MG8727ZT-91/UC)

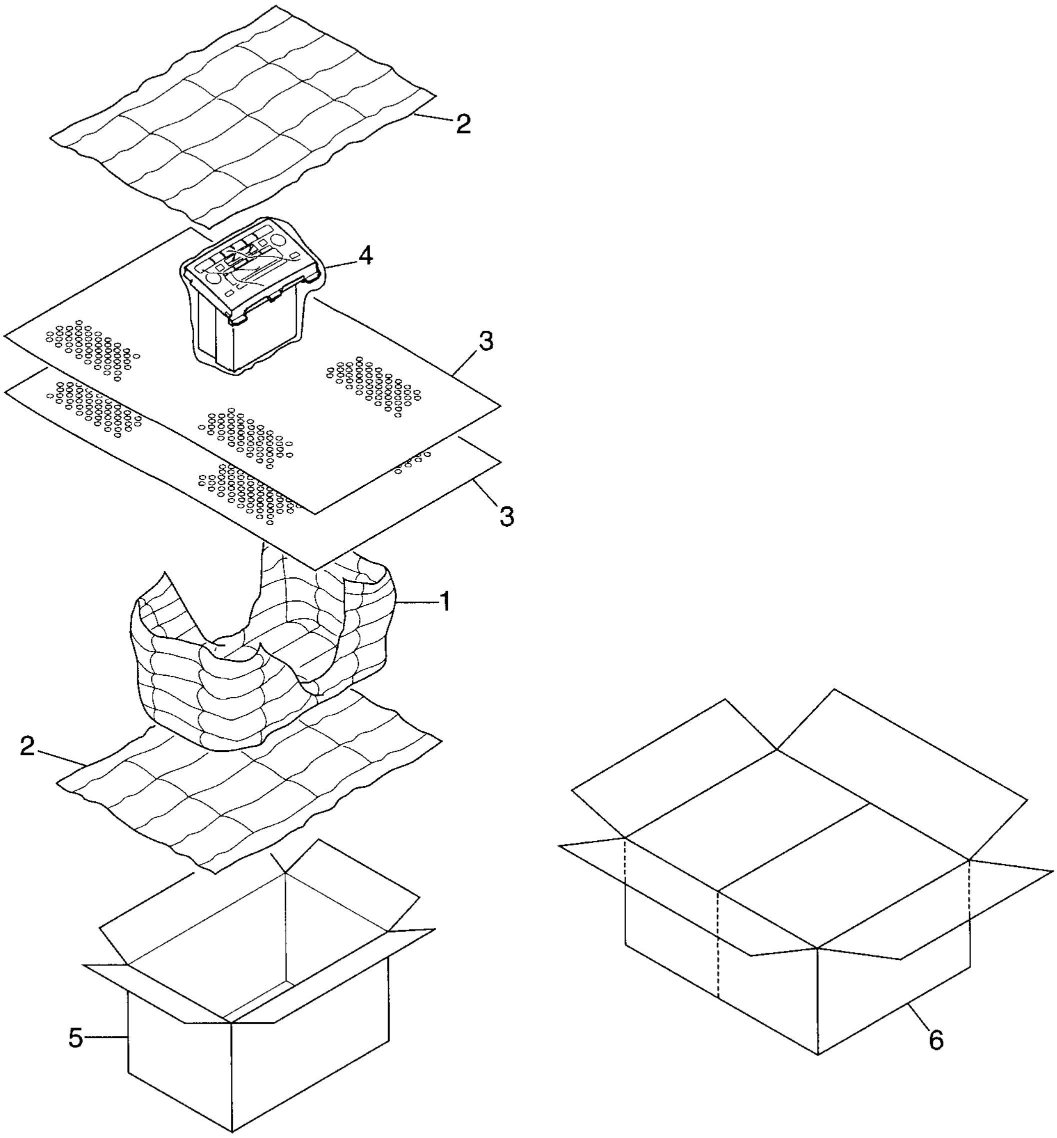

PACKING(FX-MG8527ZT-91/UC,MG8727ZT-91/UC) SECTIGN PARTS LIST

Mark	No.	Description	Part No.
*	1	Air Cap	CHW1945
*	2	Air Cap	CHW1948
	3	Cover	CEG1045
	4	Polyethylene Bag	CEG1174
	5	Carton	CHG4861
	6	Contain Box	CHL4861

2.2 EXTERIOR

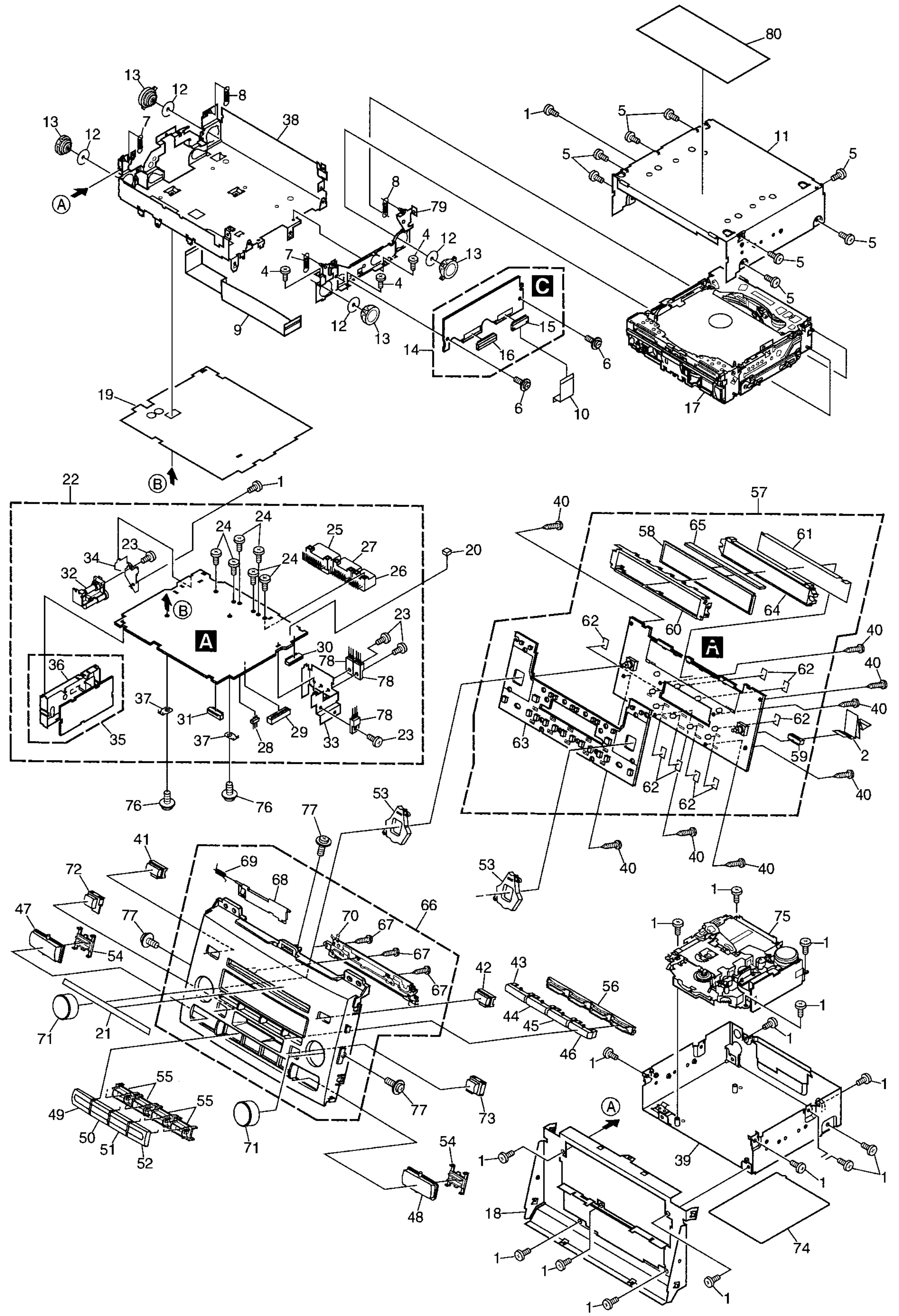

(1)EXTERIOR SECTION PARTS LIST

Mark	No.	Description	Part No.
	1	Screw	BMZ26P040FMC
	2	Connector	CDE6732
	3	•••••	
	4	Screw	BMZ20P025FMC
	5	Screw	BMZ26P040FMC
	6	Screw(M2x2.5)	CBA1076
	7	Spring(Silver)	CBH2481
	6	Spring(Black)	CBH2482
	9	Connector	CDE7020
	10	Connector	CDE7035
	11	Case	CNB2705
	12	Sheet	CNM5981
	13	Damper	CNV6608
	14	Control Unit(G2T)	CWX2649
	15	Connector(CN601)	CKS1956
	16	Connector(CN101)	CKS4512
	17	Service Mechanism Unit(G2T)	CXX1658
	16	Frame	CNC9638
	19	Insulator	CNM7496
	20	Spacer	CNM8078
	21	Label	CRW1425
	22	Main Unit	See Contrast table(2)
	23	Screw	BMZ30P060FMC
	24	Screw(M3x6)	CBA1393
	25	Connector(CN801)	CKM1322
	26	Connector(CN473)	CKM1350
	27	Connector(CN472)	CKM1351
	26	Plug(CN354)	CKS-291
	29	Connector(CN353)	CKS3568
	30	Connector(CN351)	CKS3886
	31	Connector(CN804)	CKS4361
	32	Connector(CN501)	CKX1064
	33	Holder	CNC9639
	34	Holder	CNC9701
	35	FM/AM Tuner Unit	CWE1630
	36	Holder	CNC8855
	37	Terminal(CN802,CN803)	VNF1084
	38	Chassis Unit	CXB8029
	39	Chassis Unit	CXB7841
	40	Screw	BPZ20P080FMC

Mark	No.	Description	Part No.
	41	Button(EJECT)	CAC7189
	42	Button(LGAD)	CAC7190
	43	Button(1,2)	CAC7191
	44	Button(3,4)	CAC7192
	45	Button(5,6)	CAC7193
	46	Button(SCAN,TEXT)	CAC7194
	47	Button(SEEK,TRACK)	CAC7197
	48	Button(RDS,TYPE)	CAC7198
	49	Button(AM)	CAC7198
	50	Button(FM)	CAC7200
	51	Button(TAPE)	CAC7201
	52	Button(DISC)	CAC7202
	53	Lighting Conductor	CNV6895
	54	Holder	CNV6898
	55	Holder	CNV6899
	56	Holder	CNV6956
	57	Keyboard Unit	CWS1342
	58	LCD(LCD901)	CAW1700
	59	Connector(CN901)	CKS4361
	60	Holder	CNC9700
	61	Sheet	CNM7733
	62	Seal	CNM7771
	63	Rubber	CNV6892
	64	Lighting Conductor	CNV6894
	65	Connector	CNV7498
	66	Grille Unit	See Contrast table(2)
	67	Screw	BPZ20P060FZK
	68	Door	See Contrast table(2)
	69	Spring	CBH2663
	70	Door Assy	CXC1348
	71	Knob Unit	CXB8819
	72	Button Assy(EJECT)	CXB8830
	73	Button Assy(TRAF)	CXB8831
	74	Shield Unit	CXB9781
	75	Cassette Mechanism Module	EXK4295
	76	Screw	IMS26P040FMC
	77	Screw	ISS26P060FMC
	78	Transistor(O809,811,812)	2SB1185
	79	Bracket Unit	CXB8082
	80	Label	CRW1429

(2) CONTRAST TABLE

FX-MG8527ZT/UC and FX-MG8727ZT/UC are censtructed the same except for the following:

Mark	NO	Symbol and Description	FX-MG8527ZT/UC	FX-MG8727ZT/UC
	22	Main Unit	CWM8064	CWM8582
	66	Grille Unit	CXC1344	CXC1343
	68	Door	CAT2300	CAT2295

2.3 CD MECHANISM UNIT(1)

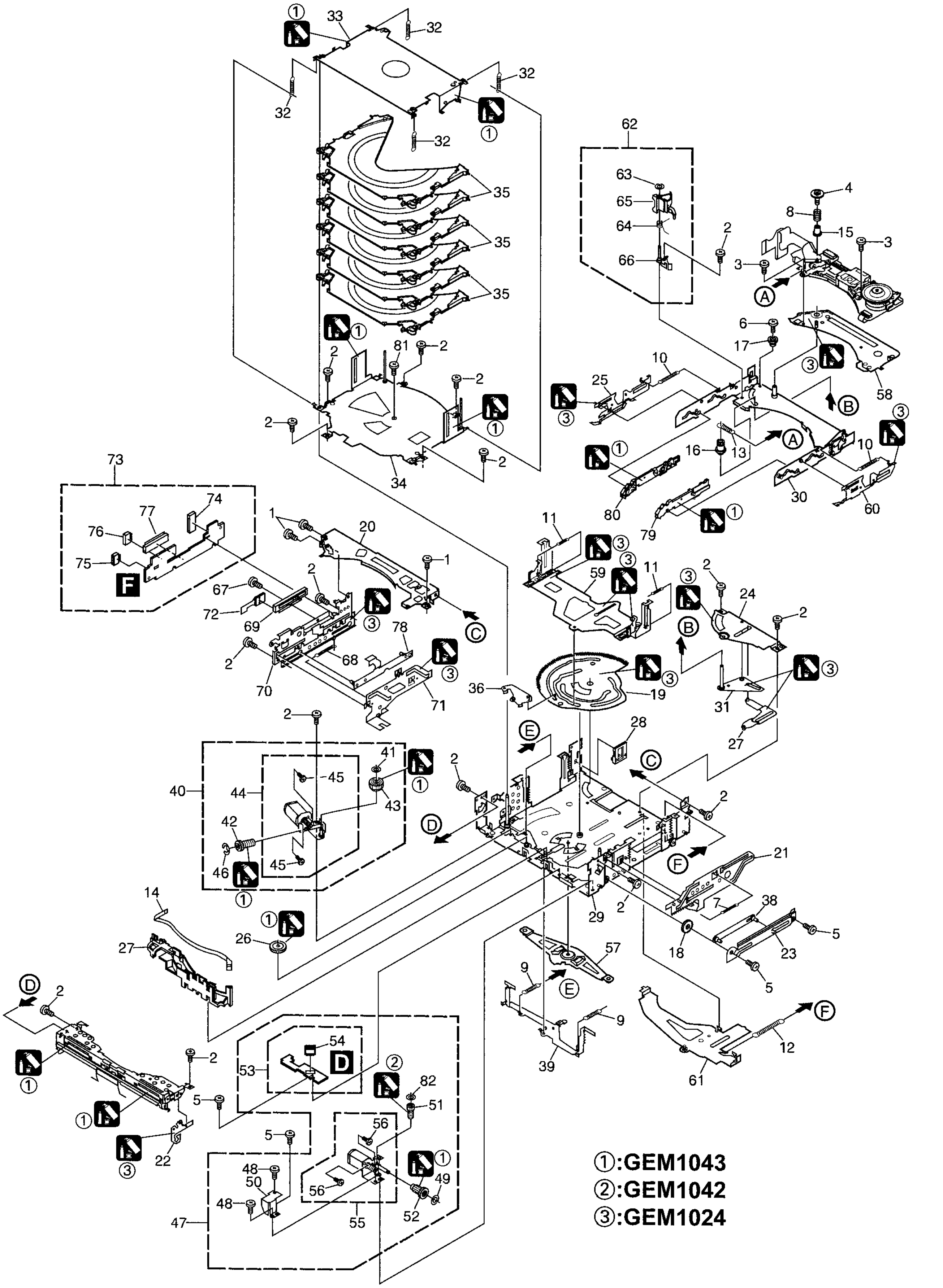

CD MECHANISM UNIT(1) SECTION PARTS LIST

Mark	No.	Description	Part No.
	1	Screw	BMZ20P020FZB
	2	Screw	BMZ20P025FMC
	3	Screw(M2x2)	CBA1556
	4	Screw(M2x2.5)	CBA1557
	5	Screw(M2x2.5)	CBA1577
	6	Screw(M2x4.5)	CBA1607
	7	Spring	CBH2460
	6	Spring	CBH2461
	9	Spring	CBH2484
	10	Spring	CBH2485
	11	Spring	CBH2486
	12	Spring	CBH2487
	13	Spring	CBH2500
	14	Connector	CDE6698
	15	Collar	CLA3994
	16	Collar	CLA4039
	17	Collar	CLA4248
	16	Gear	CNC9222
*	19	Cam Gear	CNC9223
	20	Frame	CNC9225
	21	Steer	CNC9669
	22	Arm	CNC9242
	23	Bracket	CNC9403
*	24	Bracket	CNC9408
*	25	Lever	CNC9953
	26	Gear	CNV6612
	27	Holder	CNV6648
	26	Holder	CNV6738
*	29	Chassis Unit	CXB6873
*	30	Frame Unit	CXB6875
*	31	Arm Unit	CXB6887
	32	Spring	CBH2488
	33	Holder Unit	CXB6877
	34	Holder Unit	CXB6884
	35	Tray Unit	CXB6930
	36	Lever Unit	CXB6934
*	37	Lever Unit	CXB6936
	38	Lever Unit	CXB6938
*	39	Lever Unit	CXB6939
	40	Cam Motor Assy	CXB7522
	41	Washer	CBF1064
	42	Gear	CNV6610
	43	Gear	CNV6611
	44	Motor Unit(-A)(M1)	CXB9726
	45	Screw	JFZ20P020FMC
	46	Washer	YE20FUC
	47	ELV Motor Assy	CXB7523
	46	Screw	BMZ20P025FMC
	49	Washer	CBF1064
	50	Holder	CNC9799

Mark	No.	Description	Part No.
	51	Gear	CNV6634
	52	Gear	CNV6635
	53	PCB Unit(LED)	CWX2614
*	54	Connector(CN31)	CKS4523
	55	Motor Unit(-B)(M2)	CXB7526
	56	Screw	JFZ20P020FMC
*	57	Arm Unit	CXB7747
	58	Bracket Unit	CXB7811
*	59	Lever Unit	CXB8653
*	60	Lever Unit	CXB8724
*	61	Lever Unit	CXB8824
	62	Arm Assy	CXB8822
	63	Washer	CBF1038
	64	Spring	CBH2489
	65	Arm	CNV6735
	66	Bracket Unit	CXB7519
	67	Screw	BMZ20P025FMC
	68	Spring	CBH2459
	69	Volume(VR1)	CCW1023
	70	Bracket	CNC9226
	71	Steer	CNC9235
	72	Flexible PCB	CNP6368
	73	PCB Unit(SIDE)	CWX2613
	74	Connector(CN12)	CKS3991
*	75	Connector(CN14)	CKS4404
	76	Connector(CN13)	CKS4525
	77	Connector(CN11)	CKS4572
	78	Lever Unit	CXB6883
*	79	Lever Unit	CXB9121
*	80	Lever Unit	CXB9122
	81	Screw	JFZ20P020FMC
	82	Washer	CBF1037

2.4 CD MECHANISM UNIT(2)

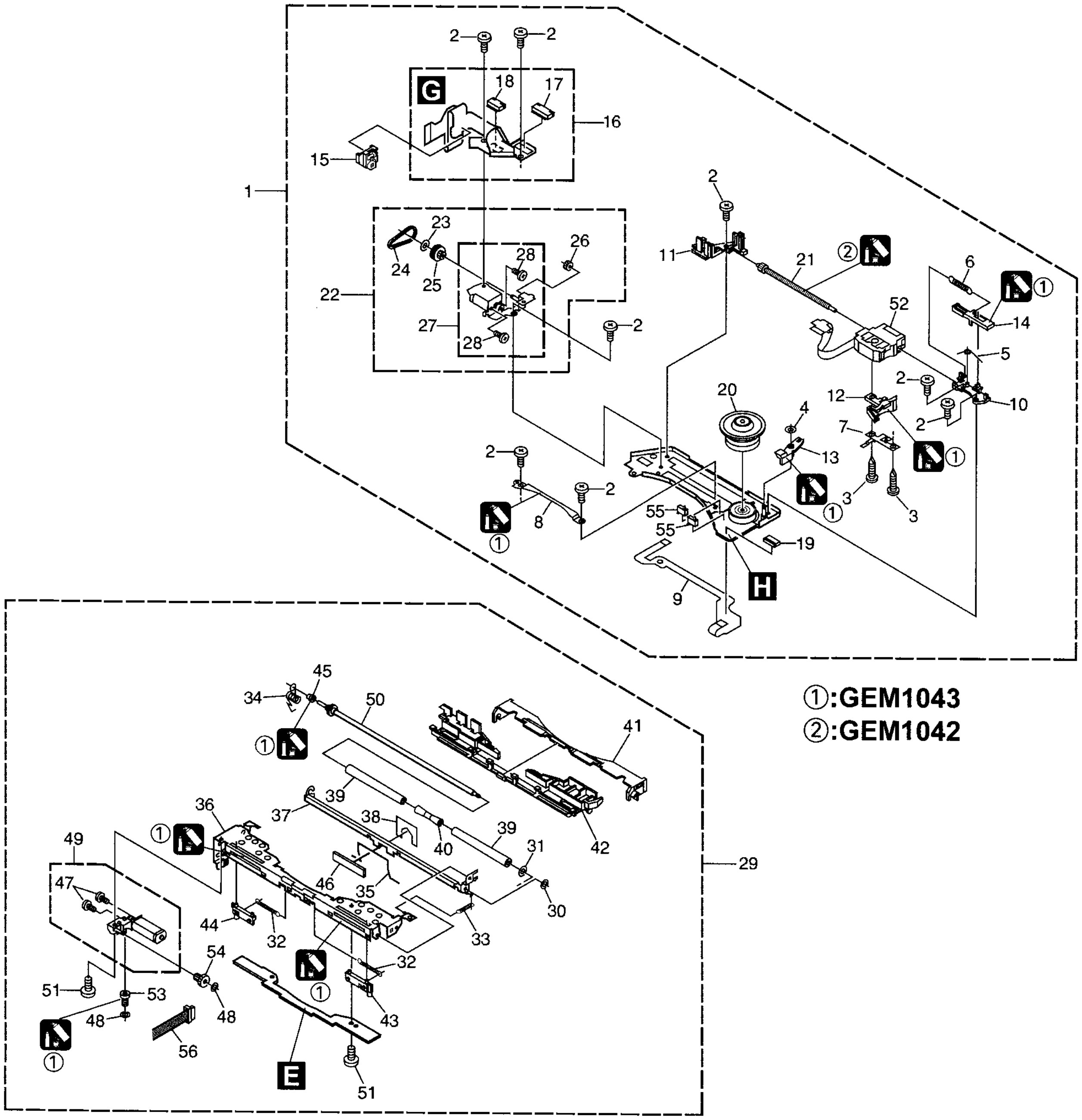

CD MECHANISM UNIT(2) SECTION PARTS LIST

Mark	No.	Description	Part No.
	1	Carriage Mech. Assy(G2T)	CXB8842
	2	Screw(M2x2)	CBA1556
	3	Screw(M2x6)	CBA1582
	4	Washer	CBF1038
	5	Spring	CBH2453
	6	Spring	CBH2480
	7	Spring	CBL1521
*	8	Guide	CNC9402
	9	Flexible PCB	CNP6217
	10	Holder	CNV6624
	11	Holder	CNV6625
	12	Rack	CNV6642
	13	Arm	CNV6731
	14	Lever	CNV6736
	15	Holder	CNV6737
	16	PCB Unit	CWX2611
	17	Connector(CN41)	CKS3785
	18	Connector(CN42)	CKS4508
	19	Connector(CN1)	CKS4508
	20	Support Wheel Unit	CXB8486
	21	Screw Unit(-A)	CXB7518
	22	Carriage Motor Assy	CXB7521
	23	Washer	CBF1038
	24	Belt	CNT1088
	25	Pulley	CNV6627
	26	Gear	CNV6629
	27	Motor Unit(-A)(M3)	CXB7517
	28	Screw	JFZ14P020FMC
	29	Loading Mech. Assy	CXB7525
	30	Washer	CBF1037
*	31	Washer	CBF1075
*	32	Spring	CBH2450
	33	Spring	CBH2452
*	34	Spring	CBH2457
*	35	Spring	CBH2580
*	36	Frame	CNC9228
*	37	Arm	CNC9229
*	38	Sheet	CNM7295
	39	Roller	CNV6616
	40	Collar	CNV6617
*	41	Guide	CNV6622
*	42	Holder	CNV6636
*	43	Lever	CNV6732
*	44	Lever	CNV6733
	45	Collar	CNV6734
*	46	Holder	CNV7144
	47	Screw	JFZ12P018FMC
	48	Washer	CBF1037
*	49	Motor Unit(-C)	CXB7529
	50	Shaft Unit(-B)	CXB7528

Mark	No.	Description	Part No.
	51	Screw	JFZ20P020FMC
	52	PU Unit(PX1)(Service)	CXX1569
*	53	Gear	CNV6620
*	54	Gear	CNV6621
	55	Switch(S1,2)	CSN1057
*	56	Connector	CDE6674

2.5 CASSETTE MECHANISM MODULE

For grease application, refer to the service manual for CX-1011 (CRT2406).

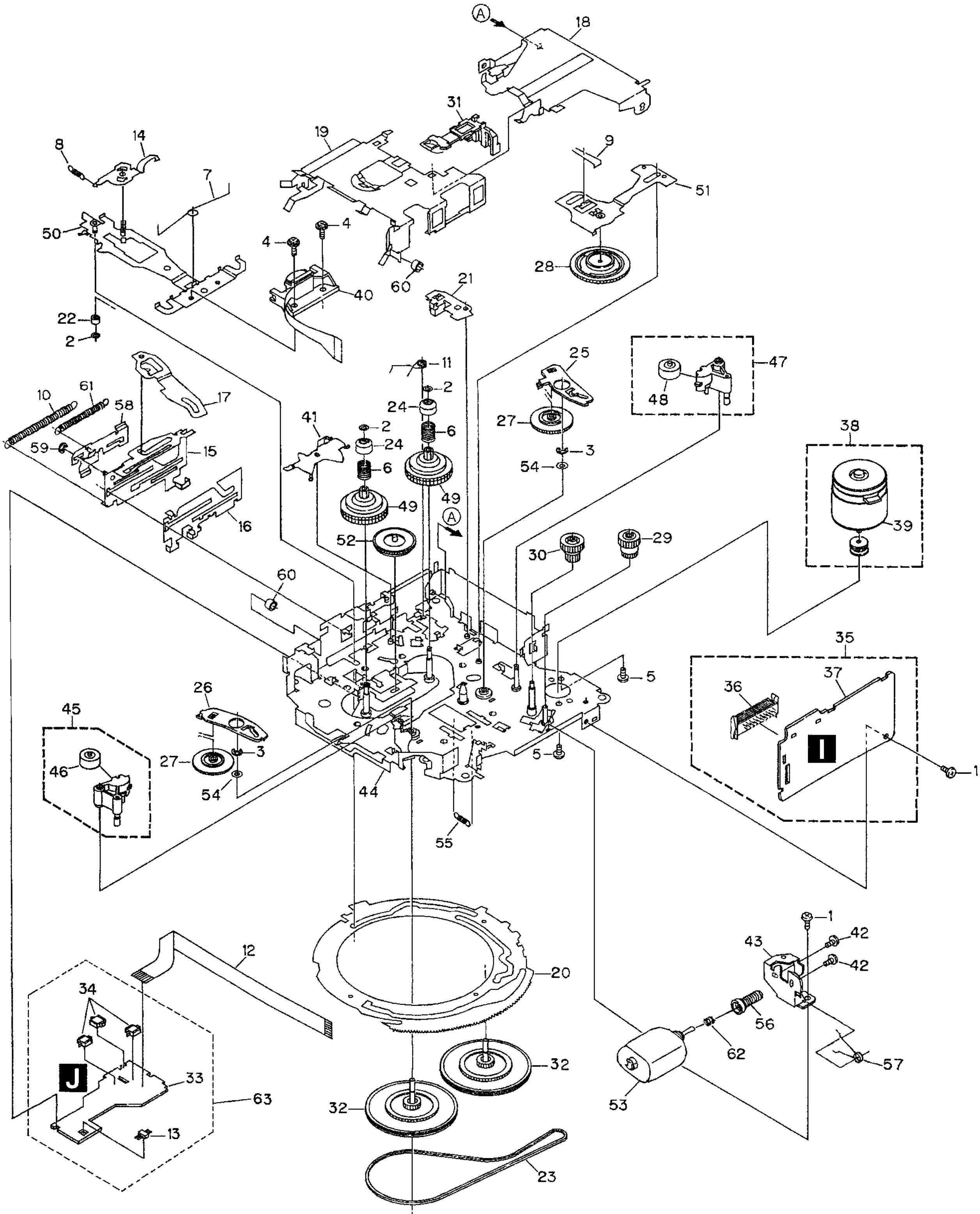

CASSETTE MECHANISM MODULE SECTION PARTS LIST

Mark	No.	Description	Part No.
	1	Screw	BSZ20P040FMC
	2	Washer	CBF1037
	3	Washer	CBG1003
	4	Screw	EBA1028
	5	Screw	CBA1037
	6	Spring	EBH1653
	7	Spring	EBH1642
	8	Spring	EBH1641
	9	Spring	EBH1626
	10	Spring	EBH1627
	11	Spring	EBH1648
	12	Cord	EDD1024
	13	Photo-reflector(Q101)	EGN1004
	14	Arm	ENC1526
	15	Lever Unit	EXA1610
	16	Lever	ENC1543
	17	Arm	ENC1532
	18	Frame	ENC1533
	19	Holder	ENC1547
	20	Gear	ENC1535
	21	Arm	ENC1550
	22	Roller	ENR1040
	23	Belt	ENT1027
	24	Collar	ENV1508
	25	Arm	ENV1539
	26	Arm	ENV1540
	27	Gear	ENV1569
	28	Gear	ENV1547
	29	Gear	ENR1044
	30	Worm Wheel	ENV1559
	31	Lever	ENV1551
	32	Flywheel	ENV1554
	33	Gathering PCB	ENX1073
	34	Switch(S101,S102,S103)	ESG1007
	35	Deck Unit	EWM1043
	36	Plug(CN251)	CKS3540
	37	Gathering PCB	ENX1076
	38	Motor Unit(M1)	EXA1618
	39	Motor	EXM1035
	40	Head Assy(HD1)	EXA1594
	41	Arm	ENC1537
	42	Screw	JGZ20P025FNI
	43	Bracket	ENC1559
	44	Chassis Unit	EXA1636
	45	Pinch Holder Unit	EXA1608
	46	Pinch Roller	ENV1518
	47	Pinch Holder Unit	EXA1607
	48	Pinch Roller	ENV1518
	49	Reel Unit	EXA1625
	50	Head Base Unit	EXA1611
	51	Lever Unit	EXA1587
	52	Gear Unit	EXA1596
	53	Motor Unit(M2)	EXA1623
	54	Washer	HBF-179
	55	Spring	EBH1537
	56	Worm Gear	ENV1564
	57	Spring	EBH1655
	58	Lever	ENC1548
	59	Washer	YE15FUC
	60	Tube	ENM1039
	61	Spring	EBH1645
	62	Spring	EBH1545
	63	Sensor Unit	EWM1041

1 2 3 4

A

B

C

D

E

F

1 2 3 4

3. BLOCK DIAORAM AND SCHEMATIC DIAORAM

3.1 BLOCK DIAORAM(1)

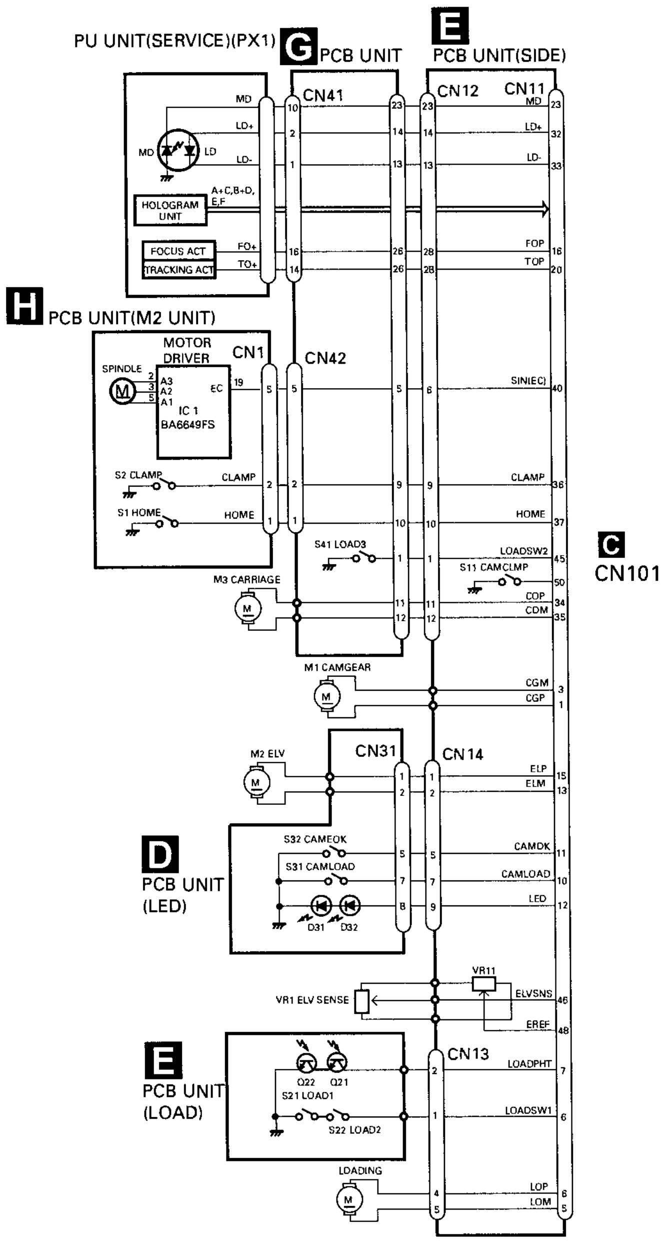

3.2 BLOCK DIAGRAM(2)

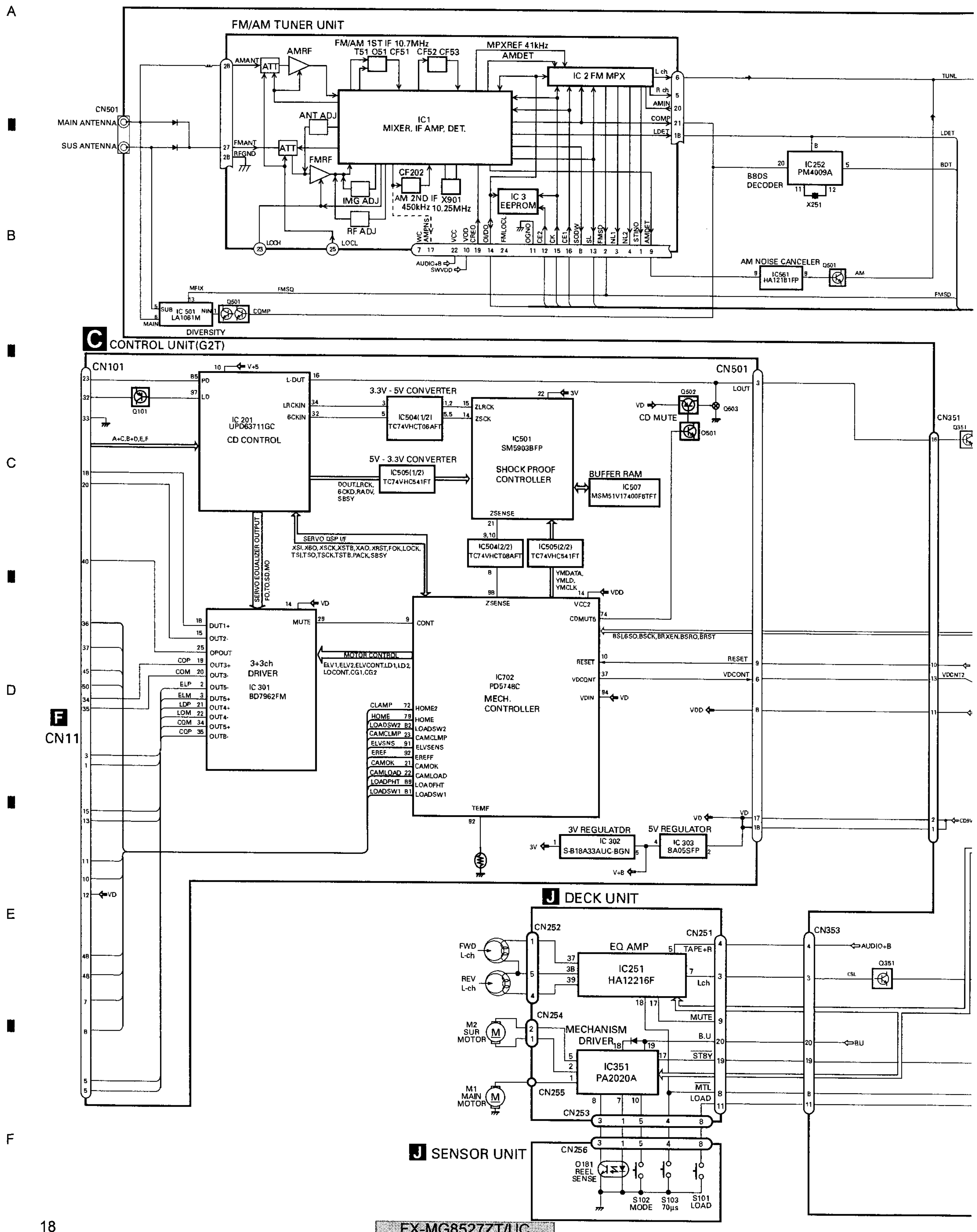

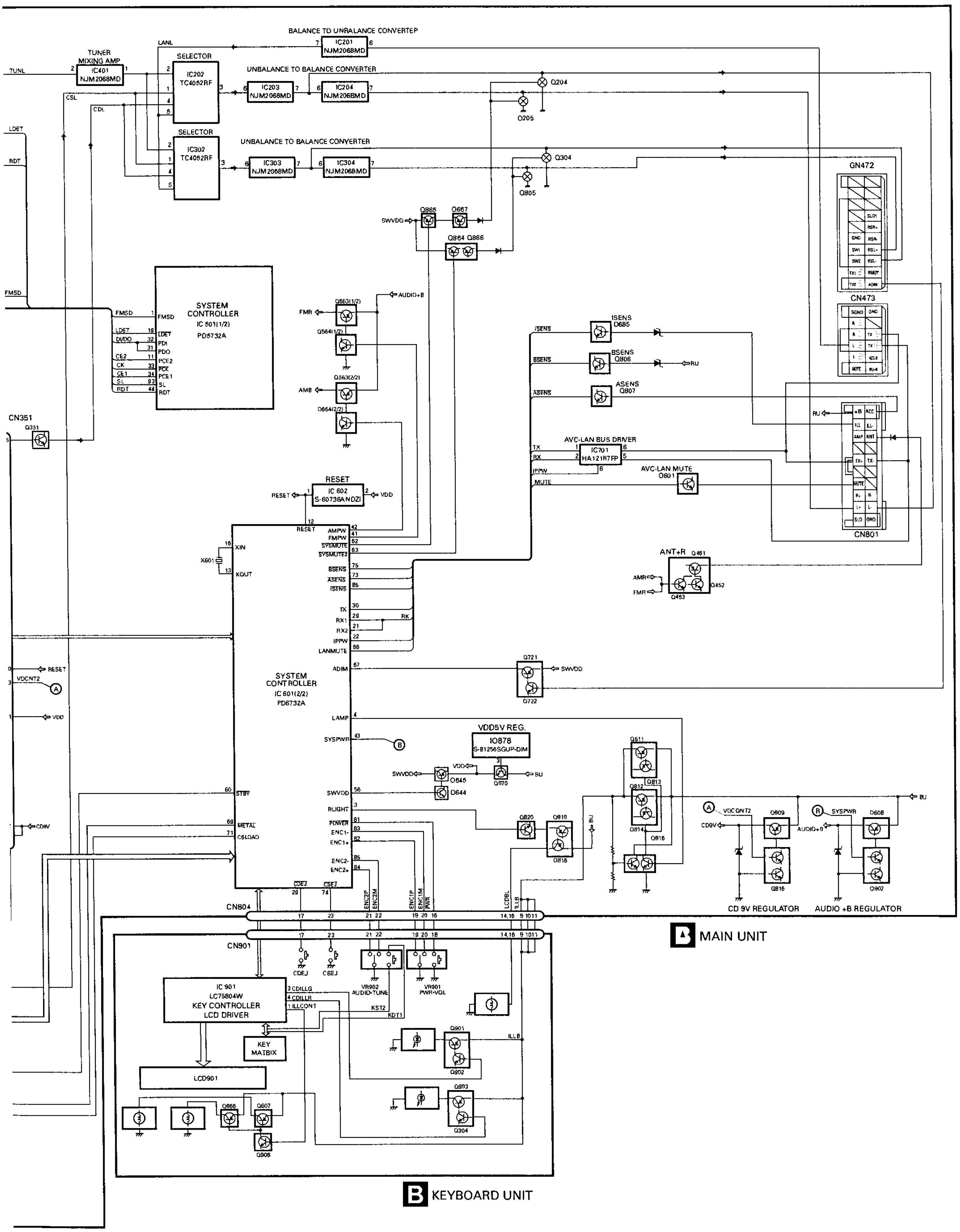
BALANCE TO UNRALANCE CONVERTEP
IC201 NJM2068MD
TUNER MIXING AMP
IC401 NJM2068MD
SELECTOR
IC202 TC4052RF
UNBALANCE TO BALANCE CONVERTER
IC203 NJM2068MD
IC204 NJM2068MD
IC302 TC4052RF
IC303 NJM2068MD
IC304 NJM2068MD
GN472
CN473
CN801
SYSTEM CONTROLLER
IC 601(1/2)
PD6732A
ISENS Q685
BSENS Q806
ASENS Q807
AVC-LAN BUS DRIVER
IC701 HA12187FP
AVC-LAN MUTE Q601
ANT+R
RESET
IC 602 S-60736ANDZI
SYSTEM CONTROLLER
IC 601(2/2)
PD6732A
VDD5V REG.
IO878 S-81256SGUP-DIM
CD 9V REGULATOR
AUDIO +B REGULATOR
CN804
CN901
IC 901 LC75804W
KEY CONTROLLER
LCD DRIVER
KEY MATBIX
LCD901
VR902 AUDIO-TUNE
VR901 PWR-VOL
MAIN UNIT
KEYBOARD UNIT

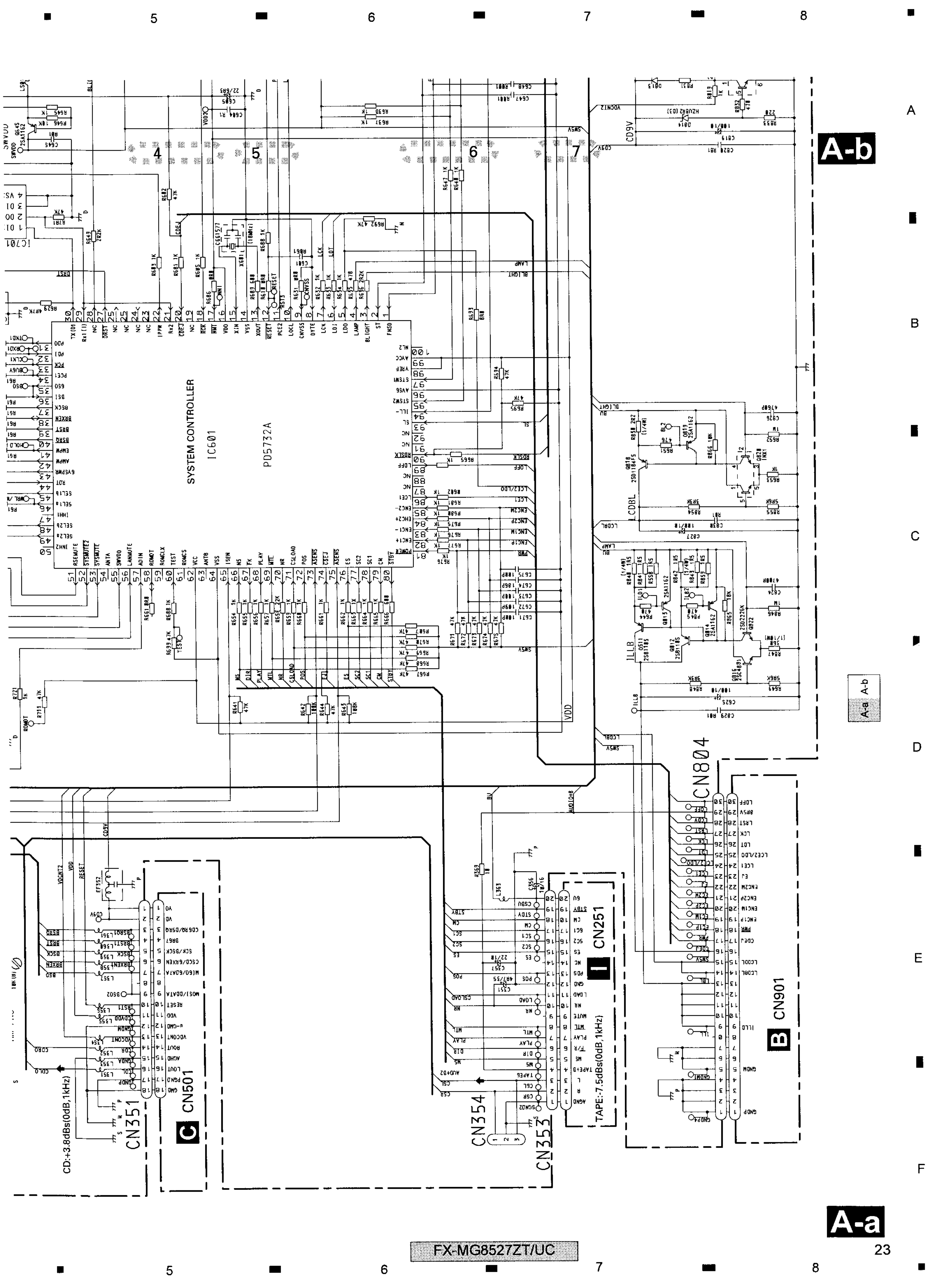
A-b
A-a
SYSTEM CONTROLLER
IC601
PD5732A
CN804
CN901
CN251
CN353
CN354
CN501
CN351
TAPE:-7.5dBs(0dB,1kHz)
CD:+3.8dBs(0dB,1kHz)

UC	FX-MG8527ZT/UC
UC/ML	FX-MG8727ZT/UC

A-a A-b

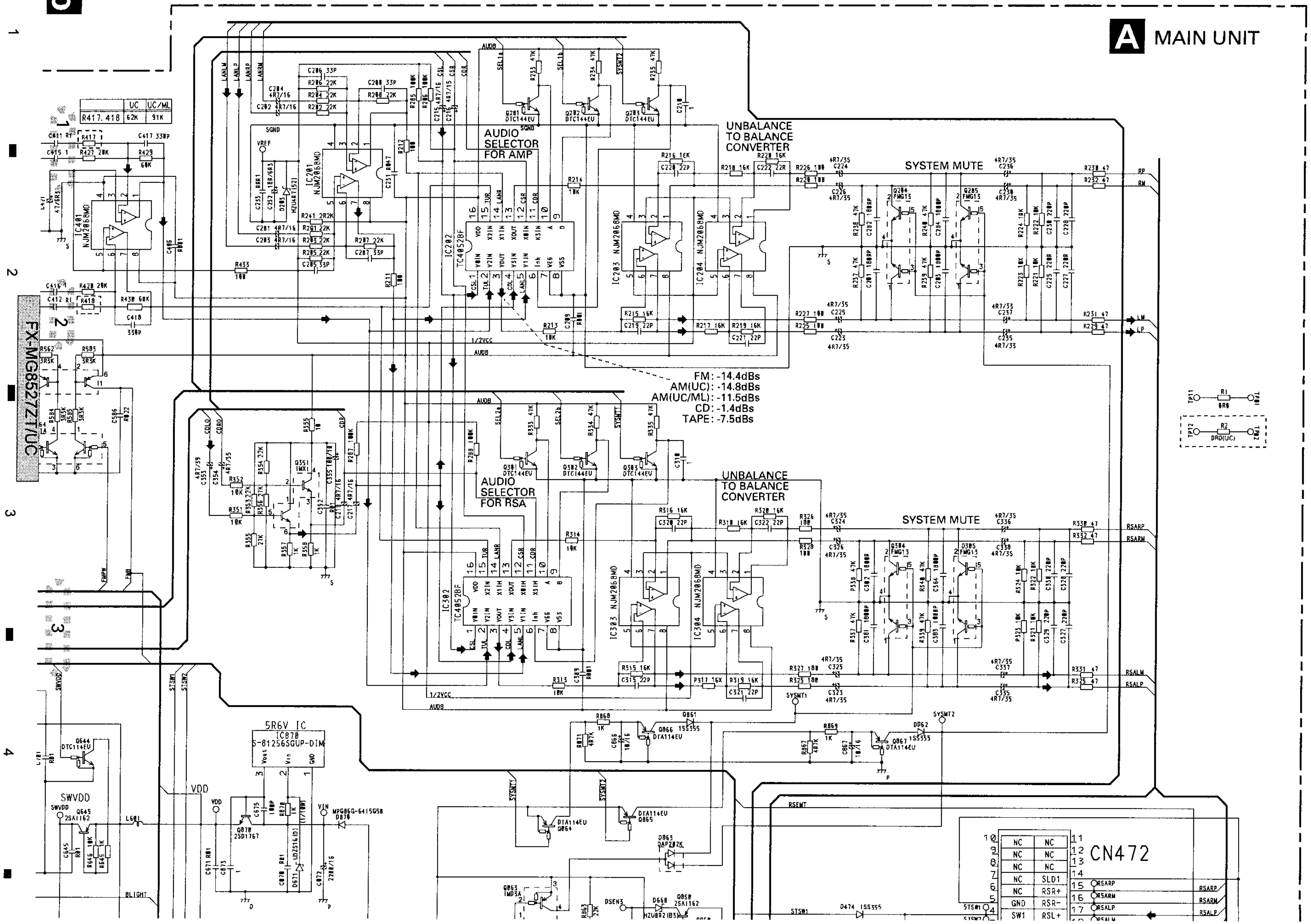

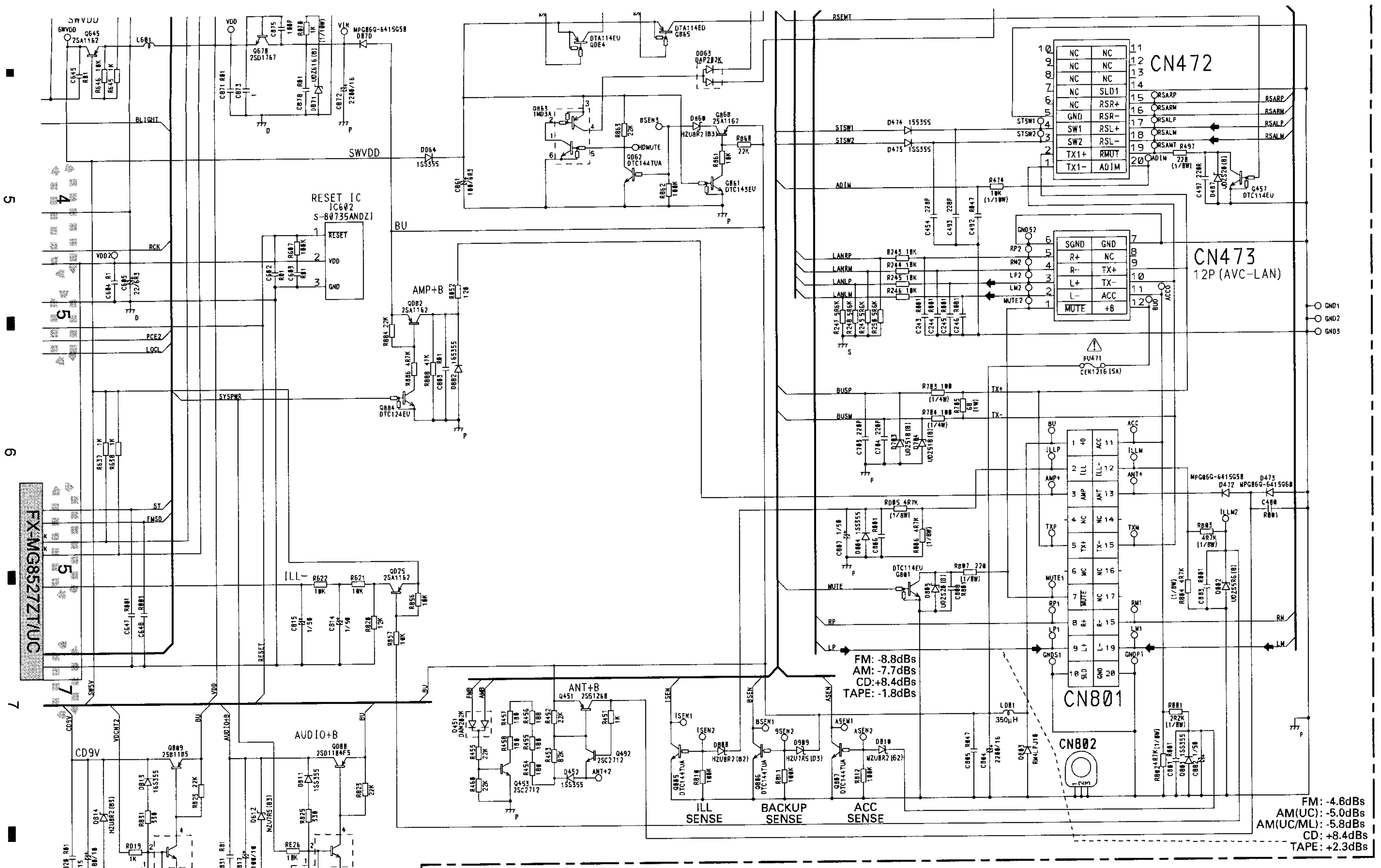

NOTE :

- Symbol indicates a resistor. No differentiation is made between chip resistors and discrete resistors.
- Symbol indicates a capacitor. Ne differentiation is made between chip capacitors and discrete capacitors.

Decimal points for resistor and capacitor fixed values are expressed as :
2.2→2R2
0.022→R022

The ⚠ mark found on some component parts indicates the importance of the safety factor of the part. Therefore, when replacing, be sure to use parts of identical designation.

A-a A-b

3.4 KEYBOARD UNIT

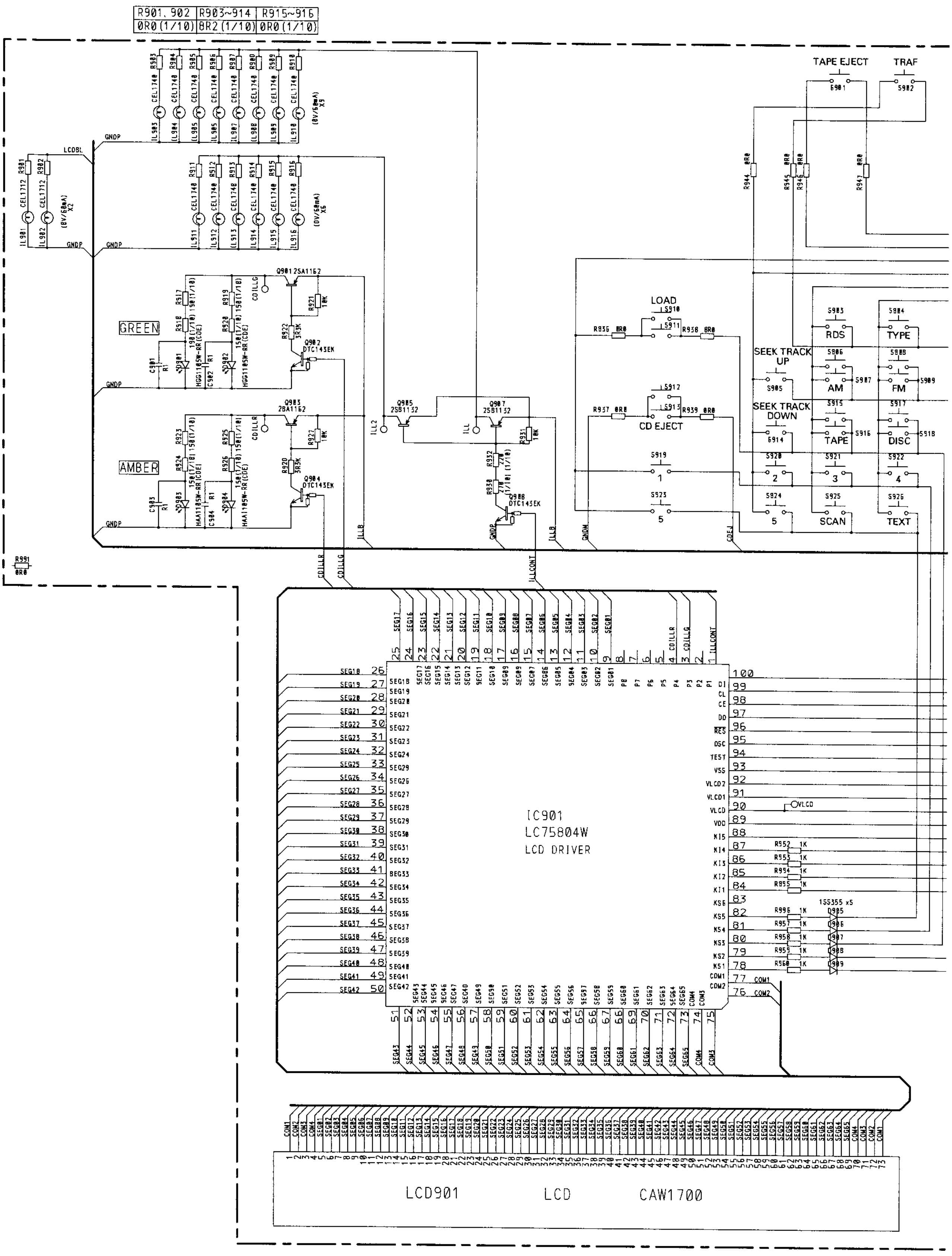

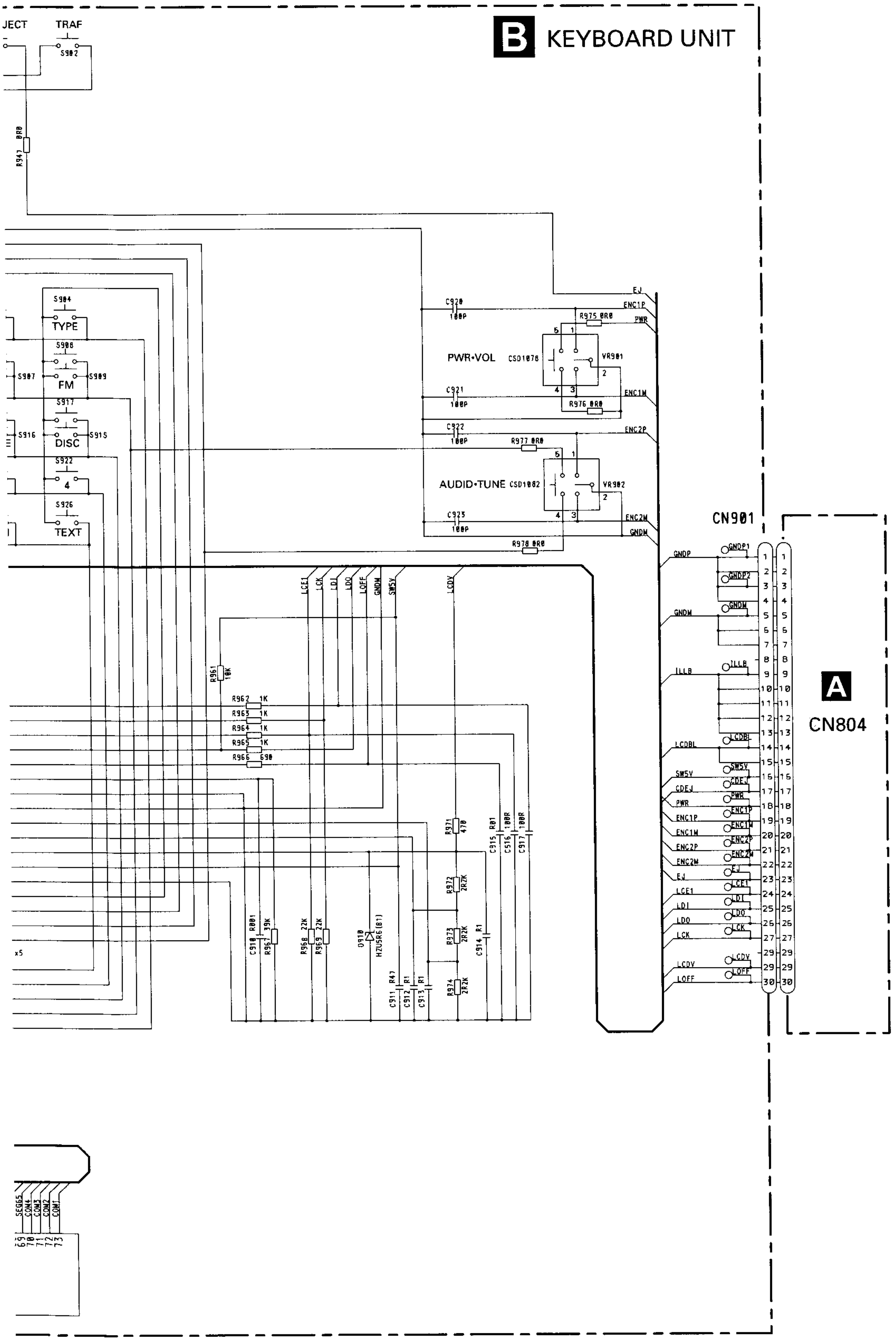

B KEYBOARD UNIT
TRAF
S902
R947 0R0
S904
TYPE
S908
S907
S909
FM
S917
S916
S915
DISC
S922
4
S926
TEXT
PWR•VOL
CSD1076
VR901
AUDIO•TUNE
CSD1082
VR902
C920 100P
C921 100P
C922 100P
C923 100P
R975 0R0
R976 0R0
R977 0R0
R978 0R0
EJ
ENC1P
PWR
ENC1M
ENC2P
ENC2M
GNDM
CN901
GNDP
ILLB
LCDBL
SW5V
CDEJ
LCE1
LCK
LDI
LDO
LOFF
LCDV
R961 10K
R962 1K
R963 1K
R964 1K
R965 1K
R966 680
R967 39K
R968 22K
R969 22K
R971 470
R972 2R2K
R973 2R2K
R974 2R2K
C910 R001
C911 R47
C912 R1
C913 R1
C914 R1
C915 R01
C916 100R
C917 100R
D910
HZU5R6(B1)
A
CN804
x5
SEG65
COM4
COM3
COM2
COM1
69
70
71
72
73

3.5 CD MECHANISM MODULE(OUIDE PAGE)

C-a

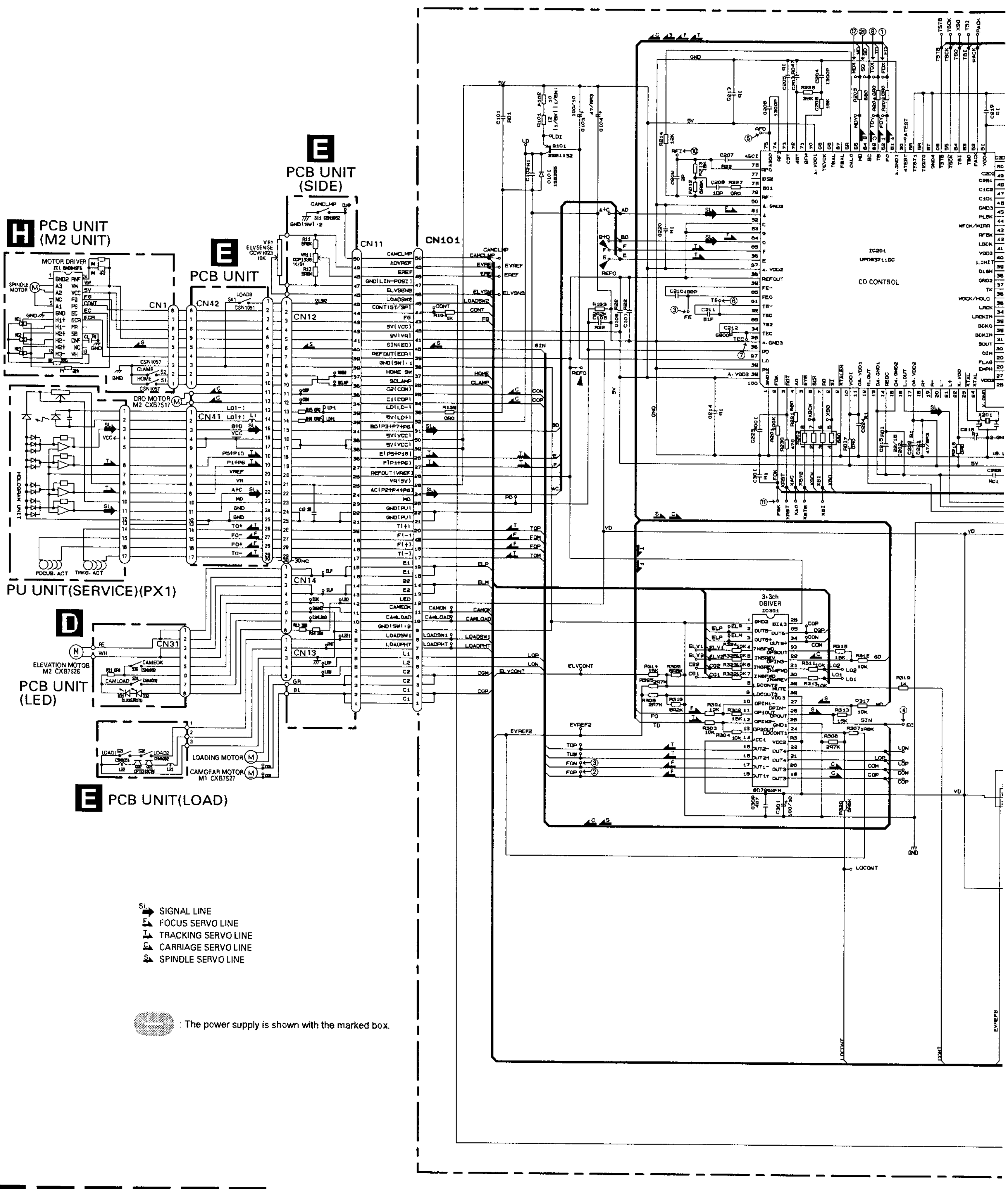

SL SIGNAL LINE
F FOCUS SERVO LINE
T TRACKING SERVO LINE
C CARRIAGE SERVO LINE
S SPINDLE SERVO LINE

: The power supply is shown with the marked box.

C D E F G H

C-b

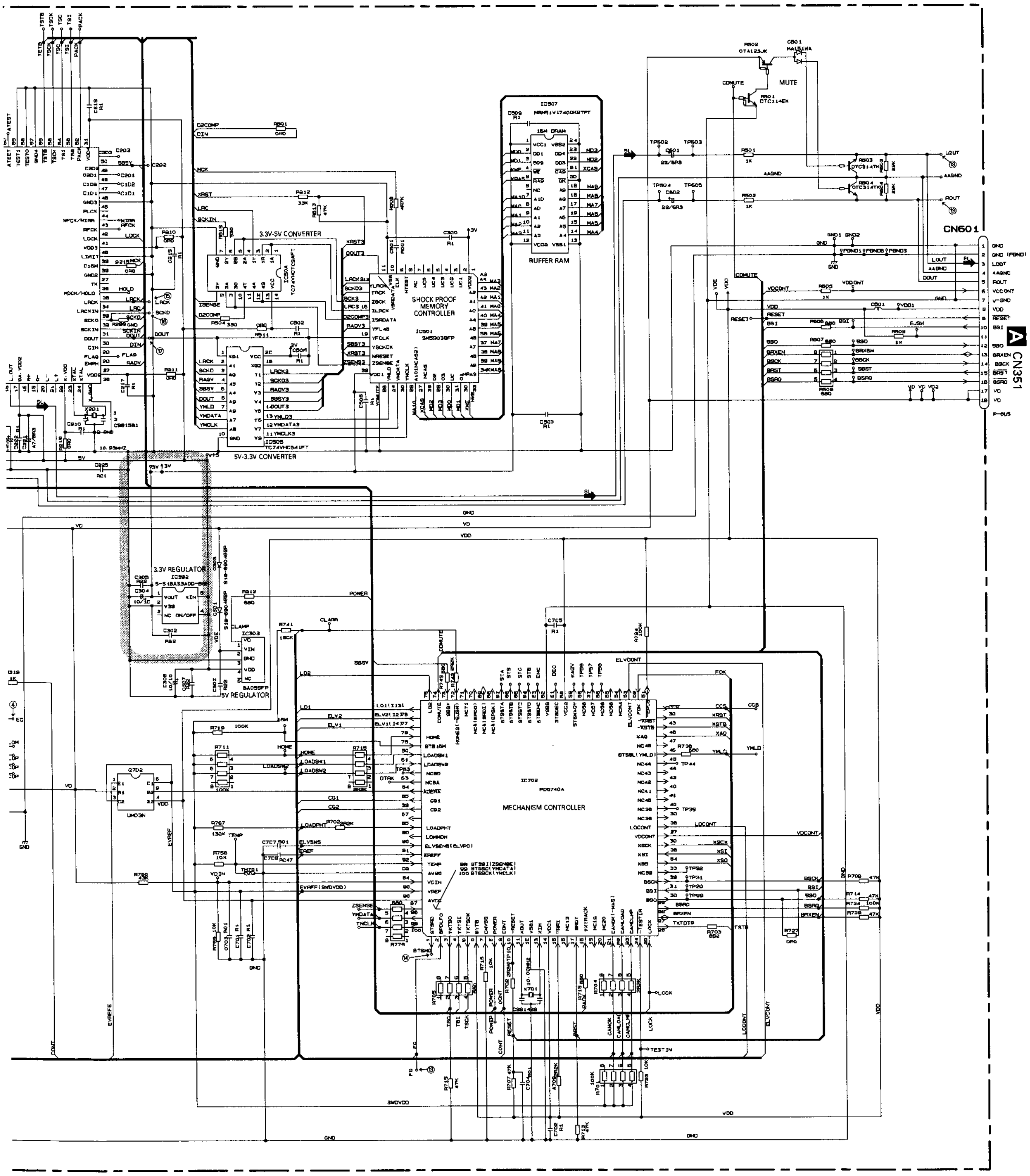

C CONTROL UNIT(G2T)
CN601
A CN351
MUTE
BUFFER RAM
SHOCK PROOF MEMORY CONTROLLER
3.3V-5V CONVERTER
5V-3.3V CONVERTER
3.3V REGULATOR
5V REGULATOR
MECHANISM CONTROLLER

FX-MG8527ZT/UC

C-a F G H

C-b

C-a C-b

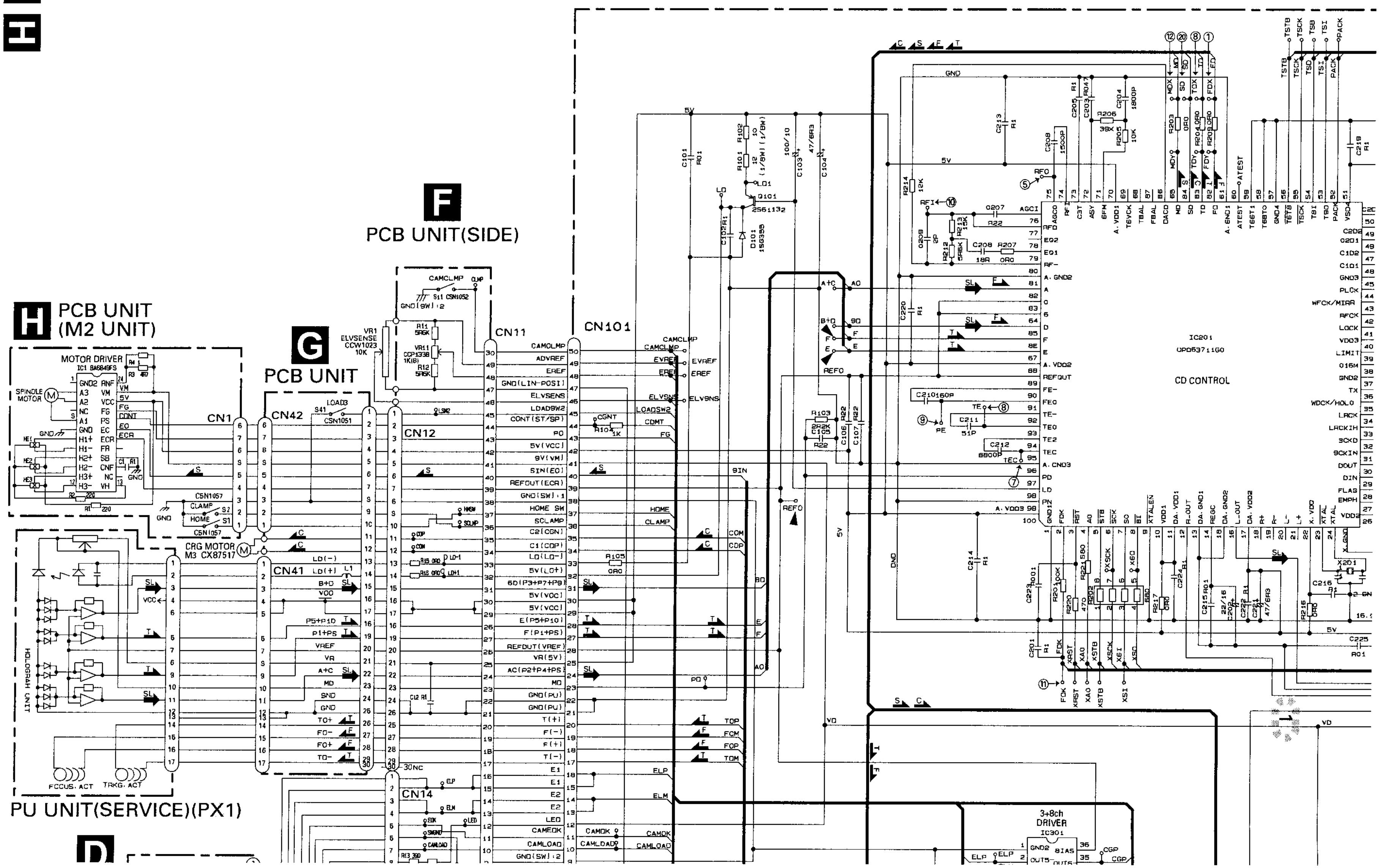

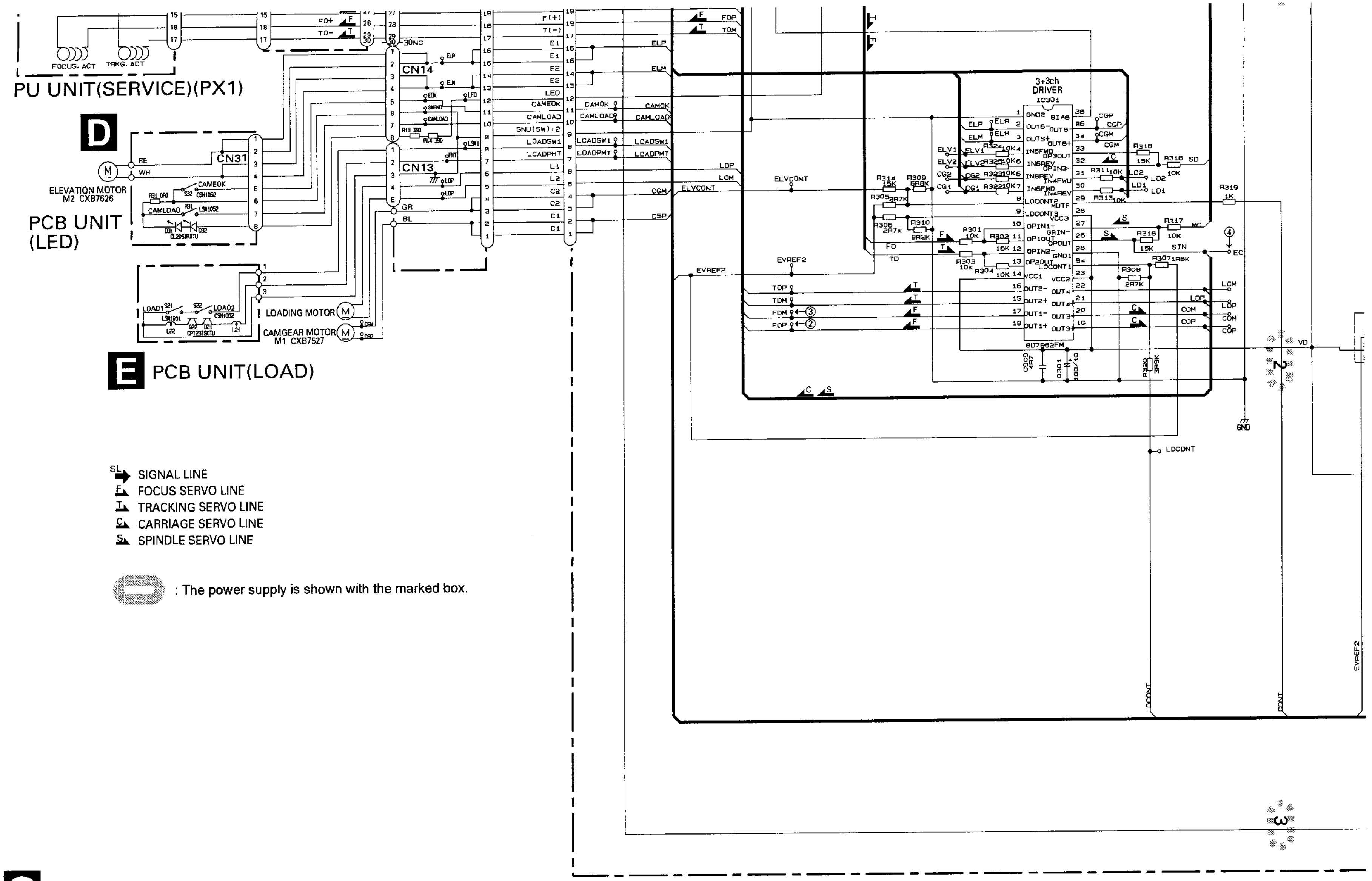

SL SIGNAL LINE
F FOCUS SERVO LINE
T TRACKING SERVO LINE
C CARRIAGE SERVO LINE
S SPINDLE SERVO LINE

: The power supply is shown with the marked box.

C-a C-b

C CONTROL UNIT(G2T)

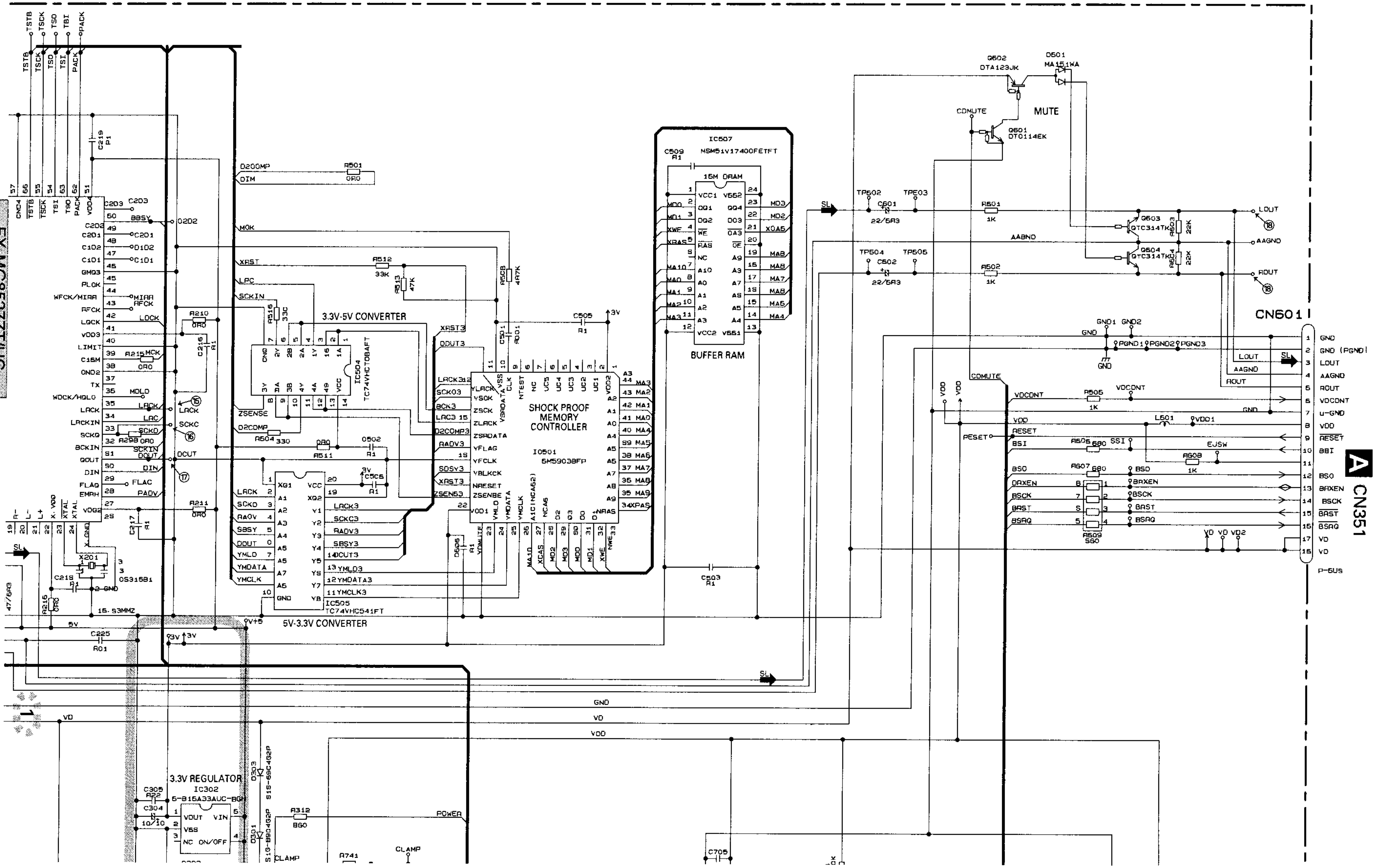

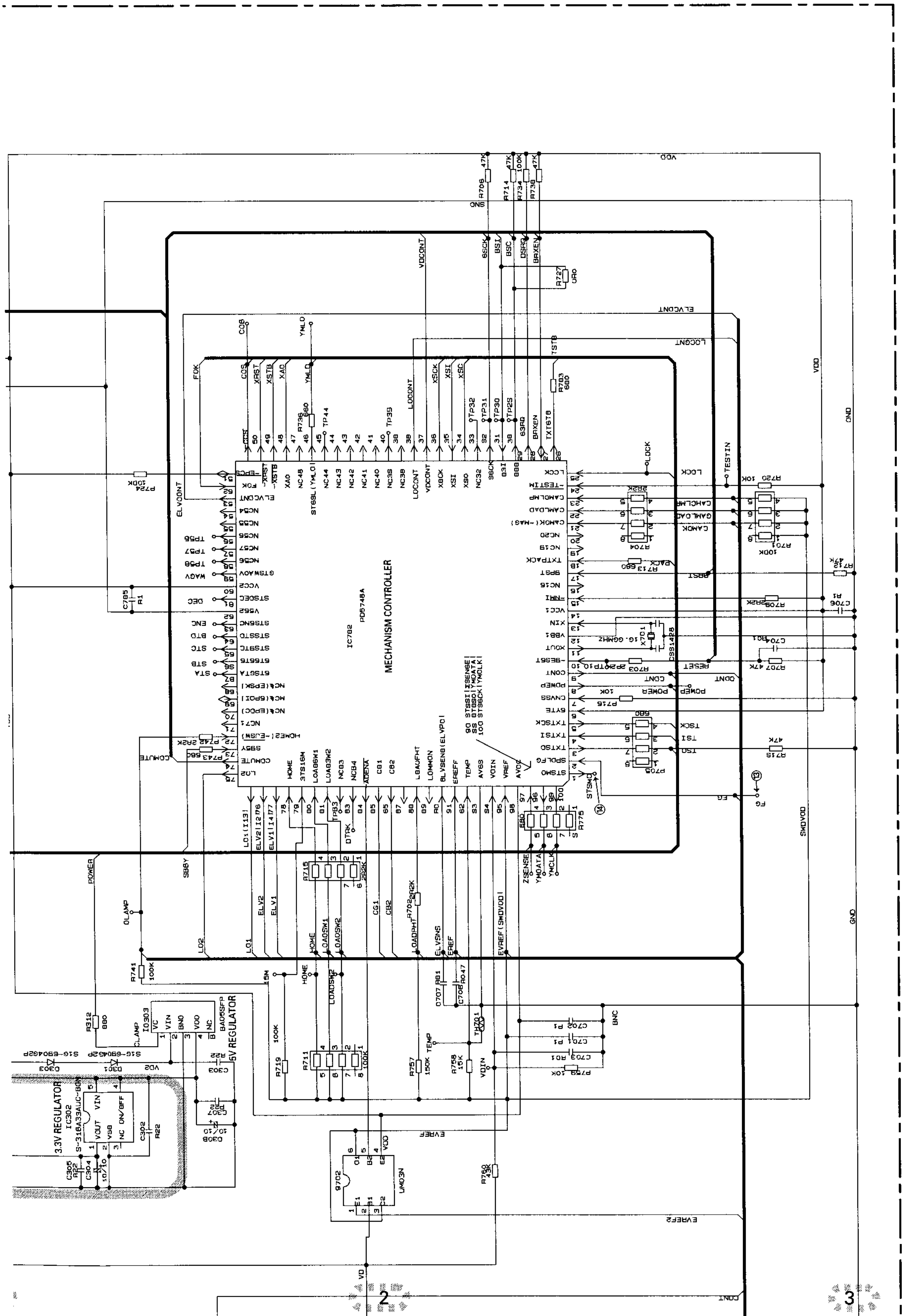
MECHANISM CONTROLLER
IC702
PD5748A
3.3V REGULATOR
IC302
5V REGULATOR
IC303
BA05SFP
UM03N
Q702

Note: The encircled numbers denote measuring points in the circuit diagram.

CH1 : ① FDX
CH2 : ② FOP
CH3 : ③ FOM
CH4 : ④ EC

Mode:Test

Focus search mode

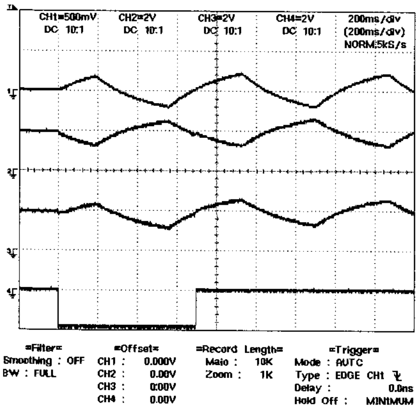

CH1 : ⑤ RFO
CH2 : ⑥ TE
CH3 : ⑦ TEC

Mode:Test

Tracking open

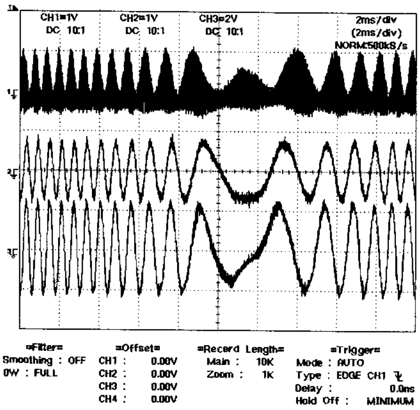

CH1 : ⑤ RFO
CH2 : ⑥ TE
CH3 : ⑧ TDX

Mode:Test

1 Track Jump

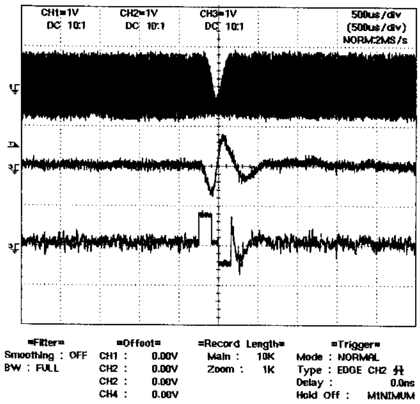

CH1 : ⑤ RFO
CH2 : ⑥ TE
CH3 : ⑧ TDX

Mode:Test

4 Track Jump

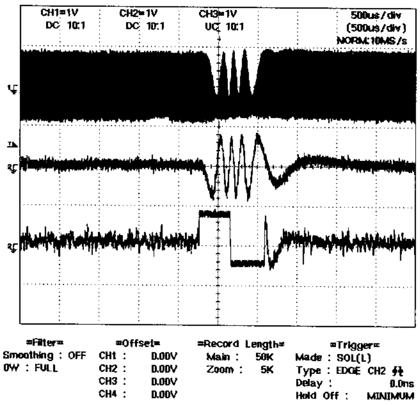

CH1 : ⑤ RFO
CH2 : ⑥ TE
CH3 : ⑧ TDX

Mode:Test

10 Track Jump

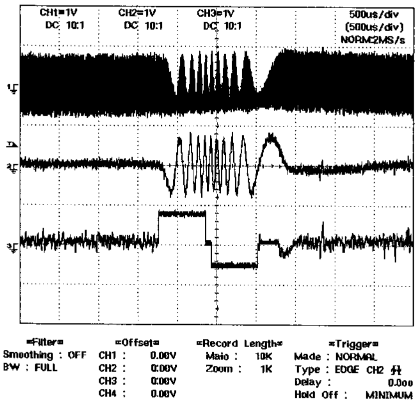

CH1 : ⑤ RFO
CH2 : ⑥ TE
CH3 : ⑧ TDX

Mode:Test

32 Track Jump

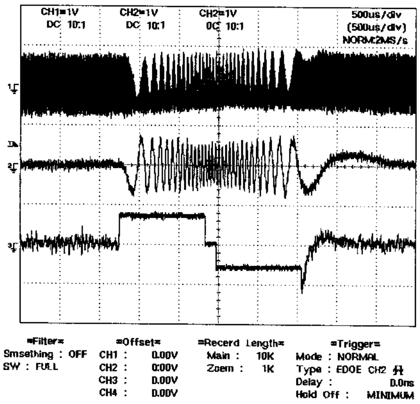

CH1 : ⑥ TE
CH2 : ⑨ FE
CH3 : ⑩ RFI

Mode:Normal

Focus close

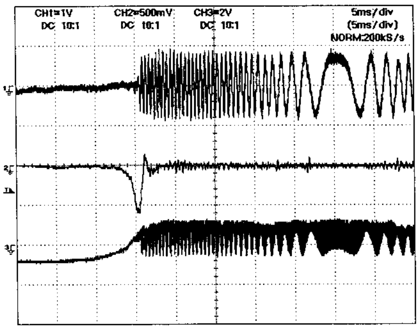

=Filter= Smoothing : OFF BW : FULL
=Offset= CH1 : 8.00V CH2 : 8.000V CH3 : 8.00V CH4 : 8.00V
=Record Length= Main : 10K Zoom : 1K
=Trigger= Mode : NORMAL Type : EDGE CH2 Delay : 0.8oo Hold Off : MINIMUM

CH1 : ① FDX
CH2 : ⑪ FOK
CH3 : ⑫ MDX
CH4 : ⑬ FG

Mode:Normal

Setup

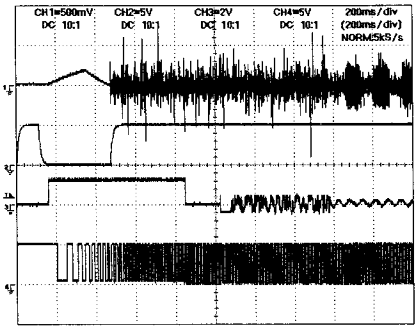

=Filter= Smoothing : OFF BW : FULL
=Offset= CH1 : 8.000V CH2 : -2.50V CH3 : 0.00V CH4 : -2.50V
=Record Length= Main : 10K Zoom : 1K
=Trigger= Mode : AUTO Type : EDGE CH3 Delay : 0.0ns Hold Off : MINIMUM

CH1 : ⑭ STSMO
CH2 : ⑥ TE

Mode:Normal

Memory capacity (remaining) at the starting of PLAY

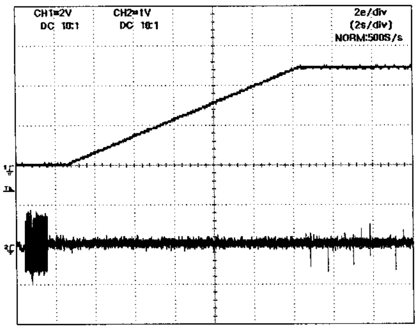

=Filter= Smoothing : OFF BW : FULL
=Offset= CH1 : -2.50V CH3 : 0.00V CH3 : 0.00V CH4 : 0.00V
=Record Length= Main : 10K Zoom : 1K
=Trigger= Mode : AUTO Type : EDGE CH3 Delay : 0.0ns Hold Off : MINIMUM

CH1 : ⑨ FE
CH2 : ① FDX
CH3 : ⑥ TE
CH4 : ⑧ TDX

Mode:Normal

During "Play"

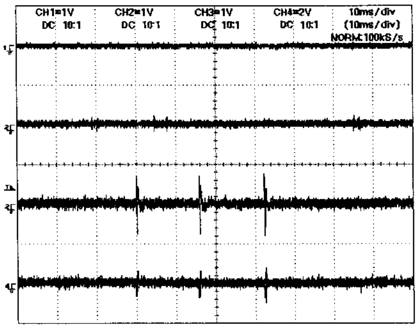

=Filter= Smoothing : OFF BW : FULL
=Offset= CH1 : 0.00V CH2 : 0.00V CH3 : 0.00V CH4 : 0.00V
=Record Length= Main : 10K Zoom : 1K
=Trigger= Mode : NORMAL Type : EDGE CH3 Delay : 8.0ns Hold Off : MINIMUM

CH1 : ⑭ RFO
CH2 : ⑥ TE

Mode:Normal

Memory capacity (remaining) during PLAY

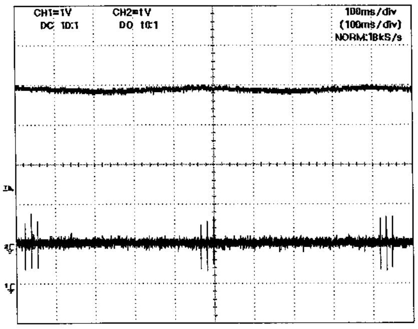

=Filter= Smoothing : OFF BW : FULL
=Offset= CH1 : -2.50V CH2 : 0.00V CH2 : 0.80V CH4 : 0.00V
=Record Length= Main : 10K Zoom : 1K
=Trigger= Mode : AUTO Type : EDGE CH3 Delay : 0.0ns Hold Off : MINIMUM

CH1 : ⑮ LRCK
CH2 : ⑯ SCKO
CH3 : ⑰ DOUT

Mode:Normal

Digital audio data(x2 speed)

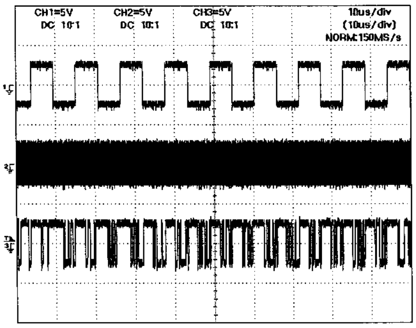

=Filter= Smoothing : OFF BW : FULL
=Offset= CH1 : 0.08V CH2 : 0.50V CH3 : 0.00V CH4 : 0.00V
=Record Length= Main : 10K Zoom : 1K
=Trigger= Mode : AUTO Type : EDGE CH3 Delay : 8.0ns Hold Off : MINIMUM

5 6 7 8

A

B

C

D

E

F

5 6 7 8

3.6 CASSETTE MECHANISM MODULE

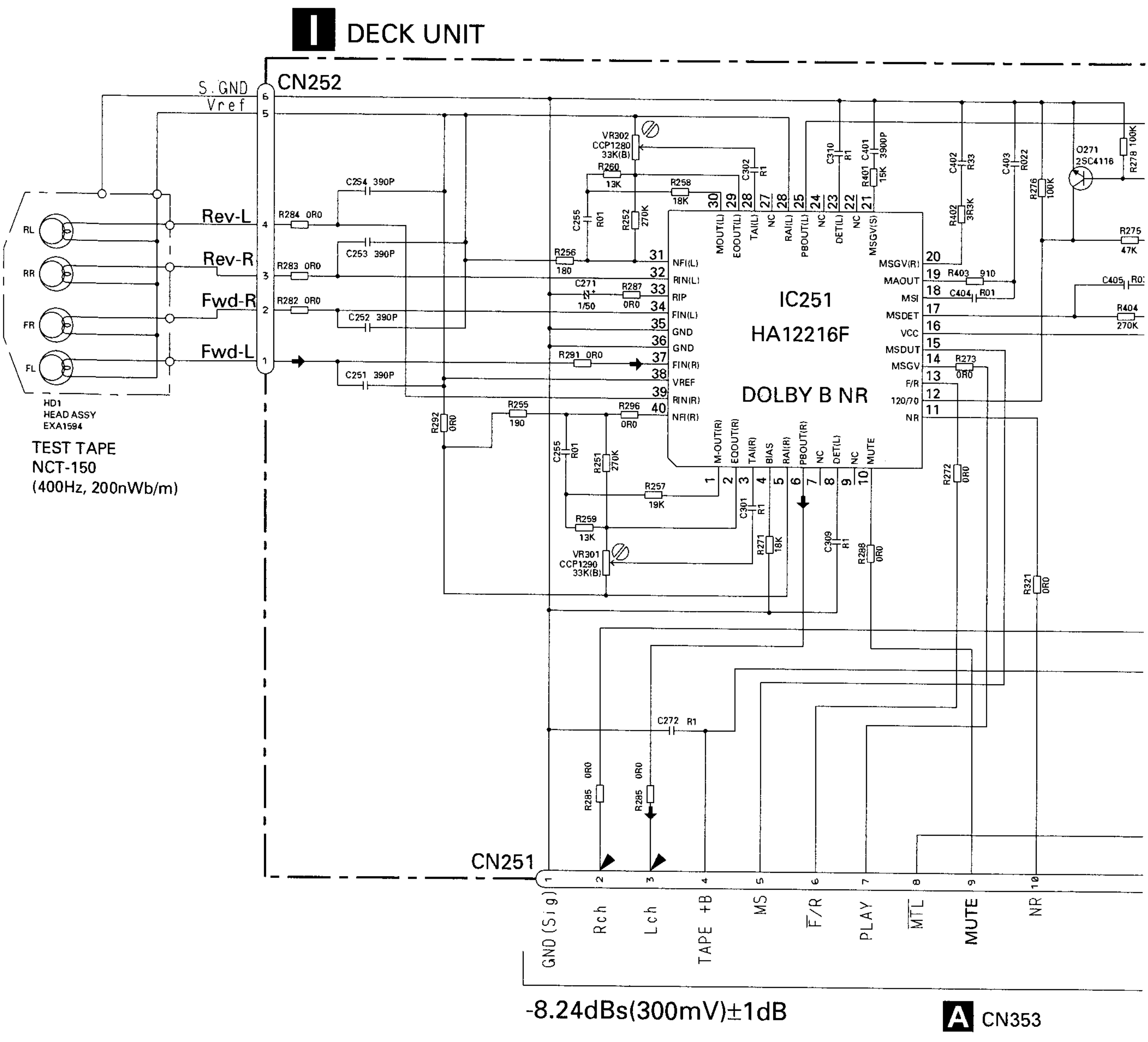

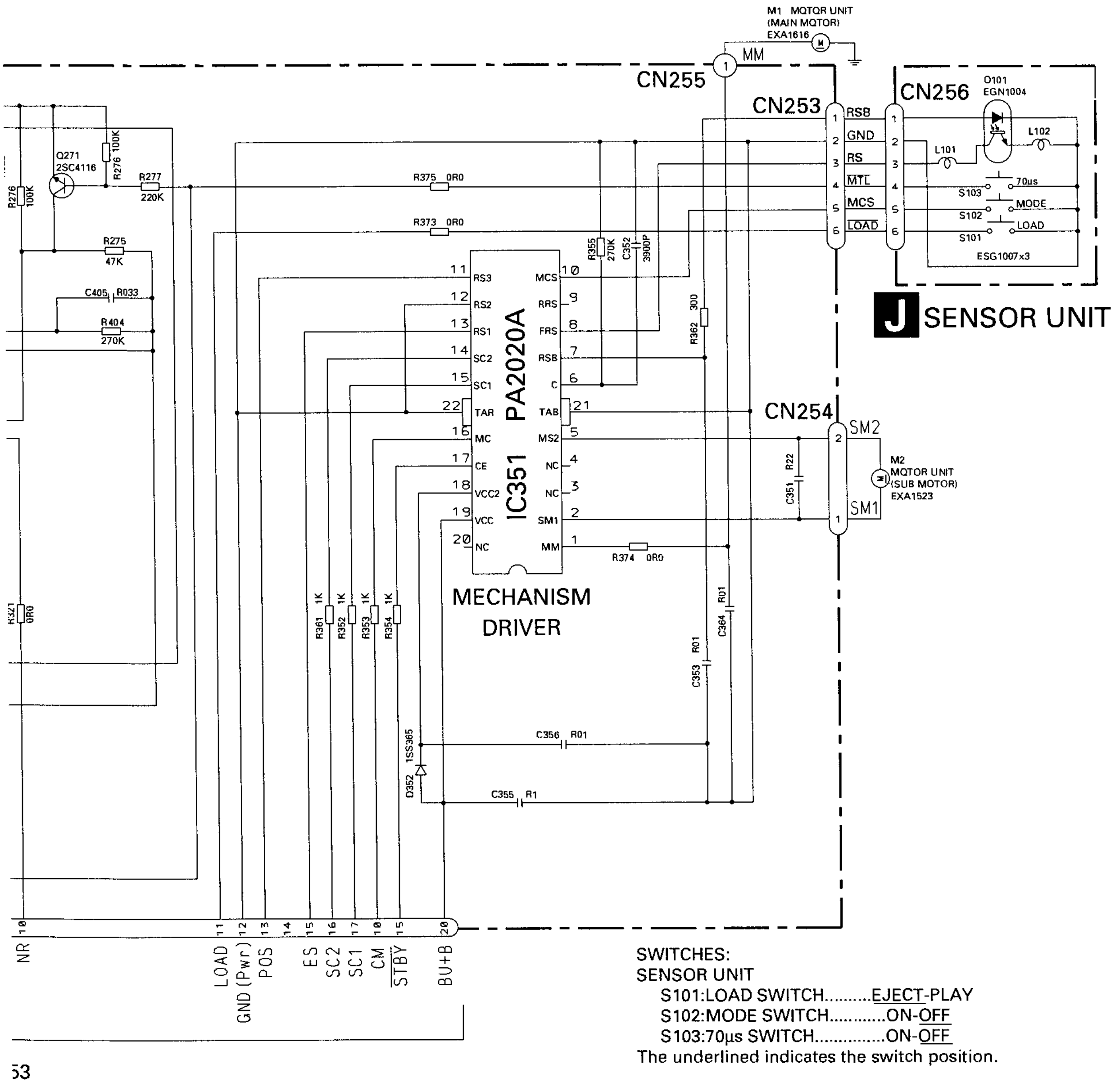

SWITCHES:
SENSOR UNIT
S101:LOAD SWITCH..........EJECT-PLAY
S102:MODE SWITCH............ON-OFF
S103:70µs SWITCH...............ON-OFF
The underlined indicates the switch position.

4. PCB CONNECTION DIAGRAM
4.1 MAIN UNIT

NOTE FOR PCB DIAGRAMS

1. The parts mountad on this PCB include all necessary parts for several destination.
   For further information for respective destinations, be sure to check with the schematic diagram.
2. Viewpoint of PCB diagrams

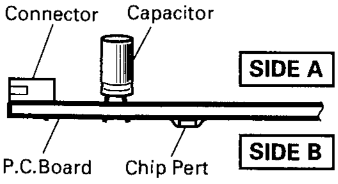

A MAIN UNIT

		IC, Q	ADJ
Q812	Q811	Q810	
	Q822	Q816	
		Q821	
		Q817	
		Q809	
		Q860	
		Q801	
		Q807	
	Q815	Q861	
		Q862	
	Q863	Q825	
		Q304	
Q806	Q204	Q808	
	Q305	Q870	
	Q802	IC870	
	Q819	Q205	
	Q818	IC303	
		Q820	
IC201	IC304	IC203	
		Q805	
IC204	Q563	IC501	
		Q501	
		Q564	
		IC302	
		IC202	
	Q351	Q562	
		IC562	
		IC701	
		Q497	
		Q722	
	Q404	IC401	
		IC711	
		Q721	
Q252	Q406	Q561	
		Q644	
	Q645	Q403	VR561
	IC602	Q405	
		IC601	
		Q402	
		IC561	
	IC252	Q401	
		IC604	
		Q606	

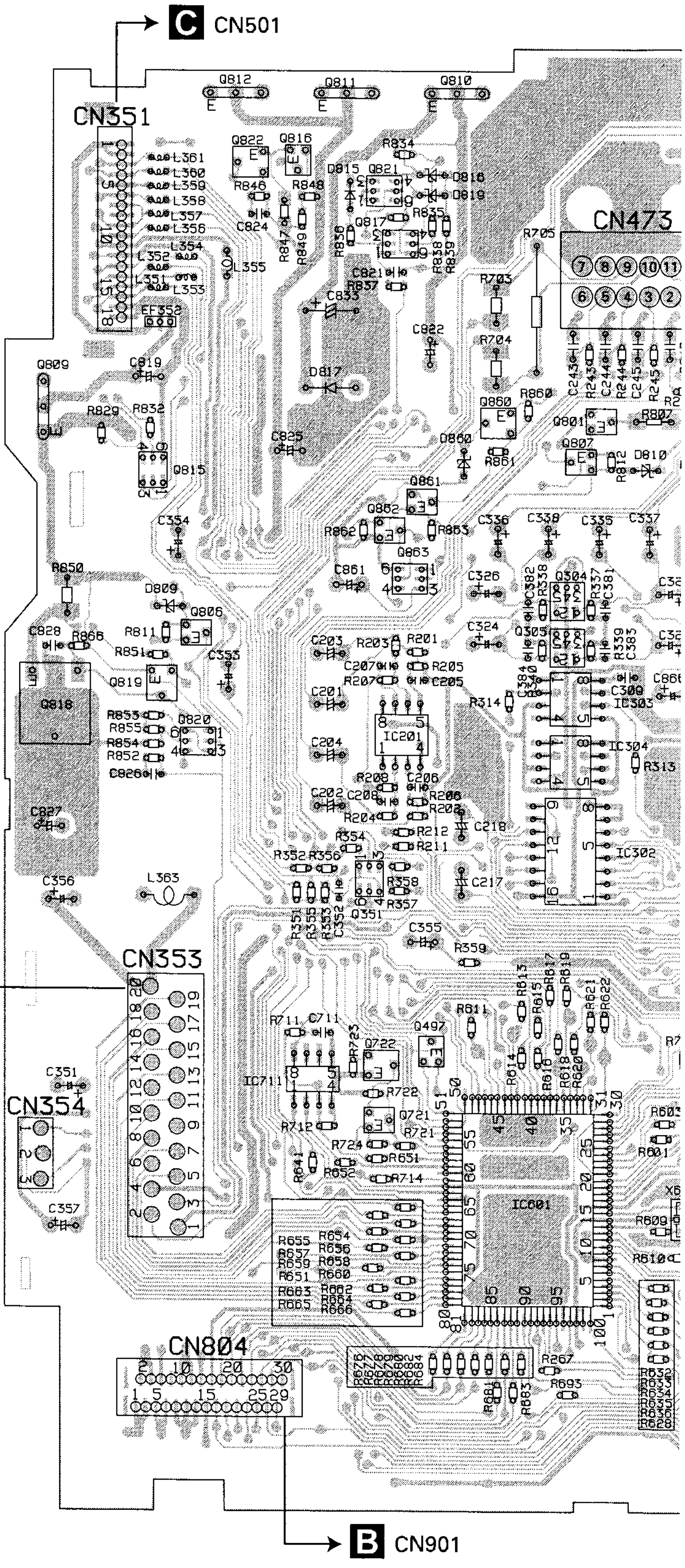

SIDE A

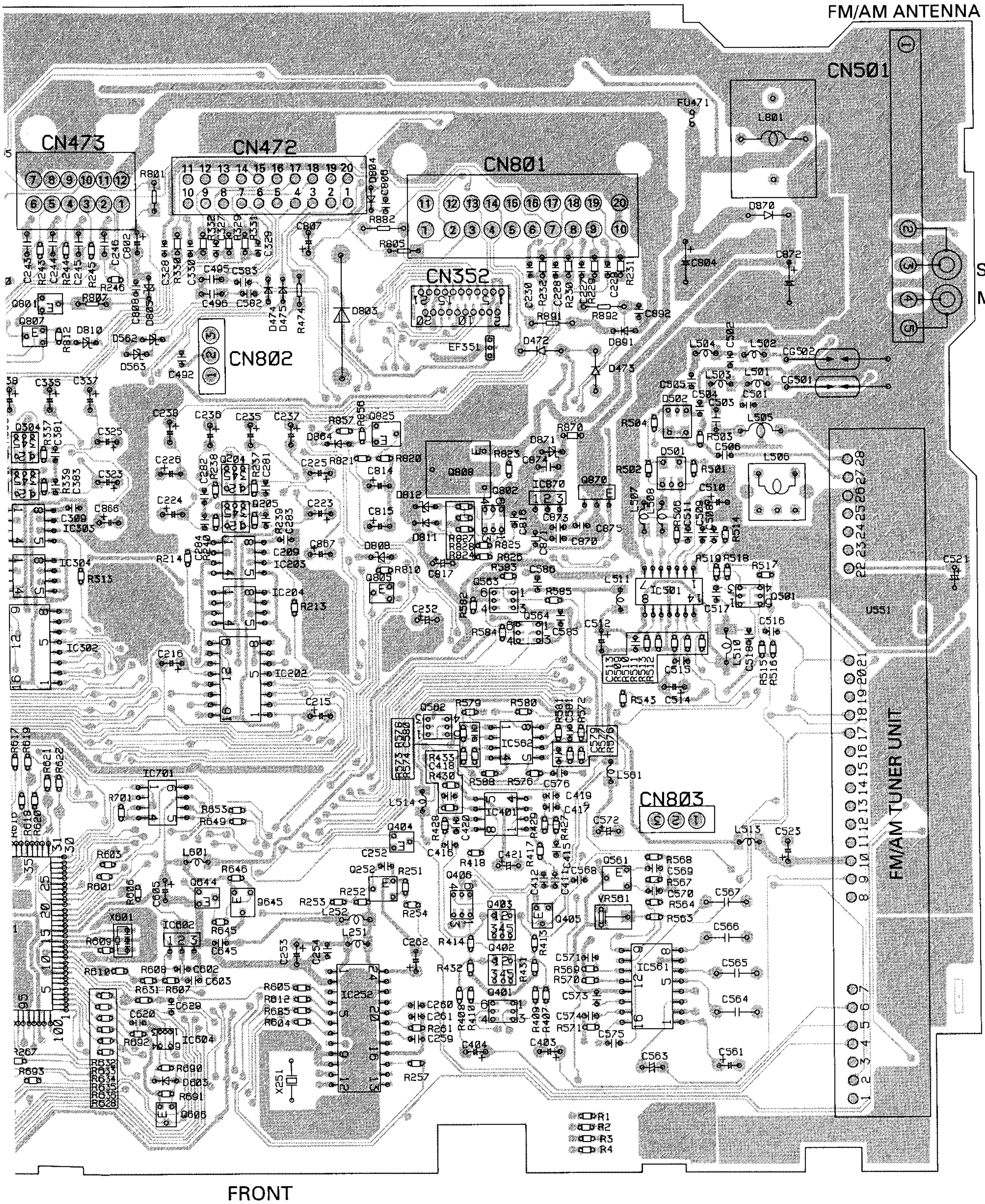

A

FX-MG8527ZT/UC

A MAIN UNIT

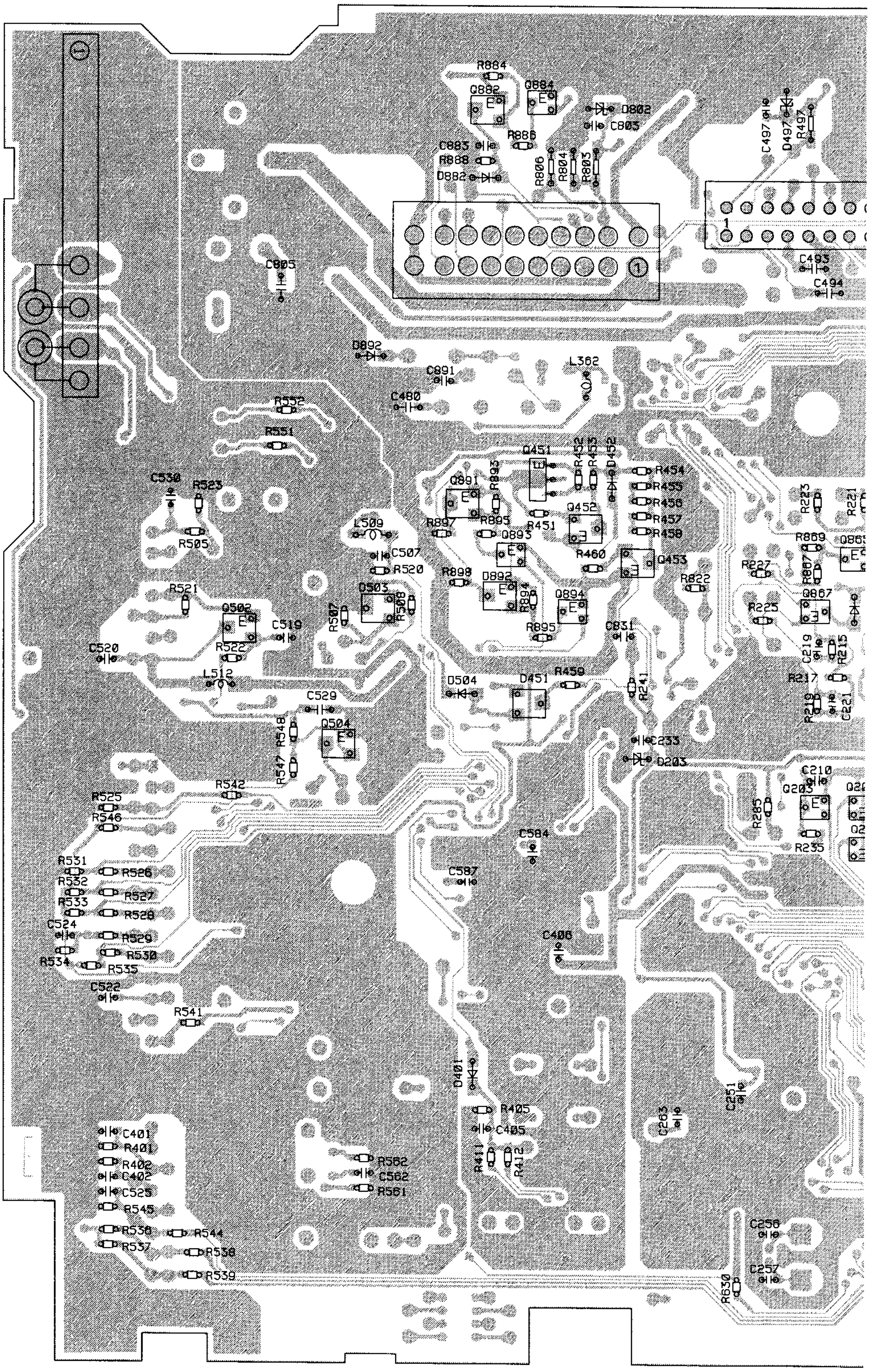

FX-MG8527ZT/UC

SIDE B

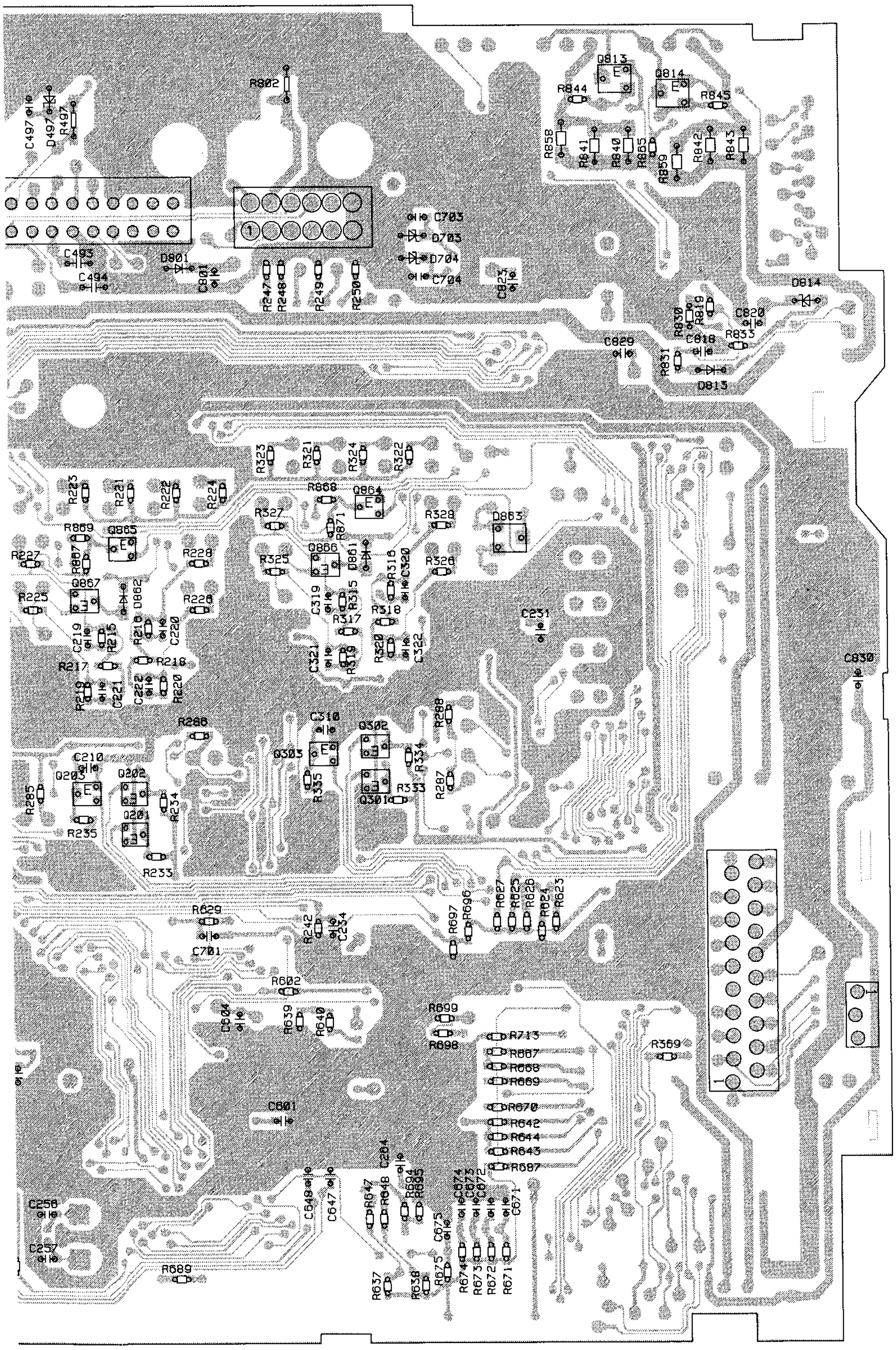

IC, Q

Q813
Q882 Q884 Q814

Q451

Q891
Q452 Q864

Q893 Q865
Q453 Q866
Q892
Q894 Q867
Q502

Q504 Q302

Q303
Q203 Q202
Q301
Q201

A

FX-MG8527ZT/UC

4.2 KEYBOARD UNIT

B KEYBOARD UNIT

SIDE A

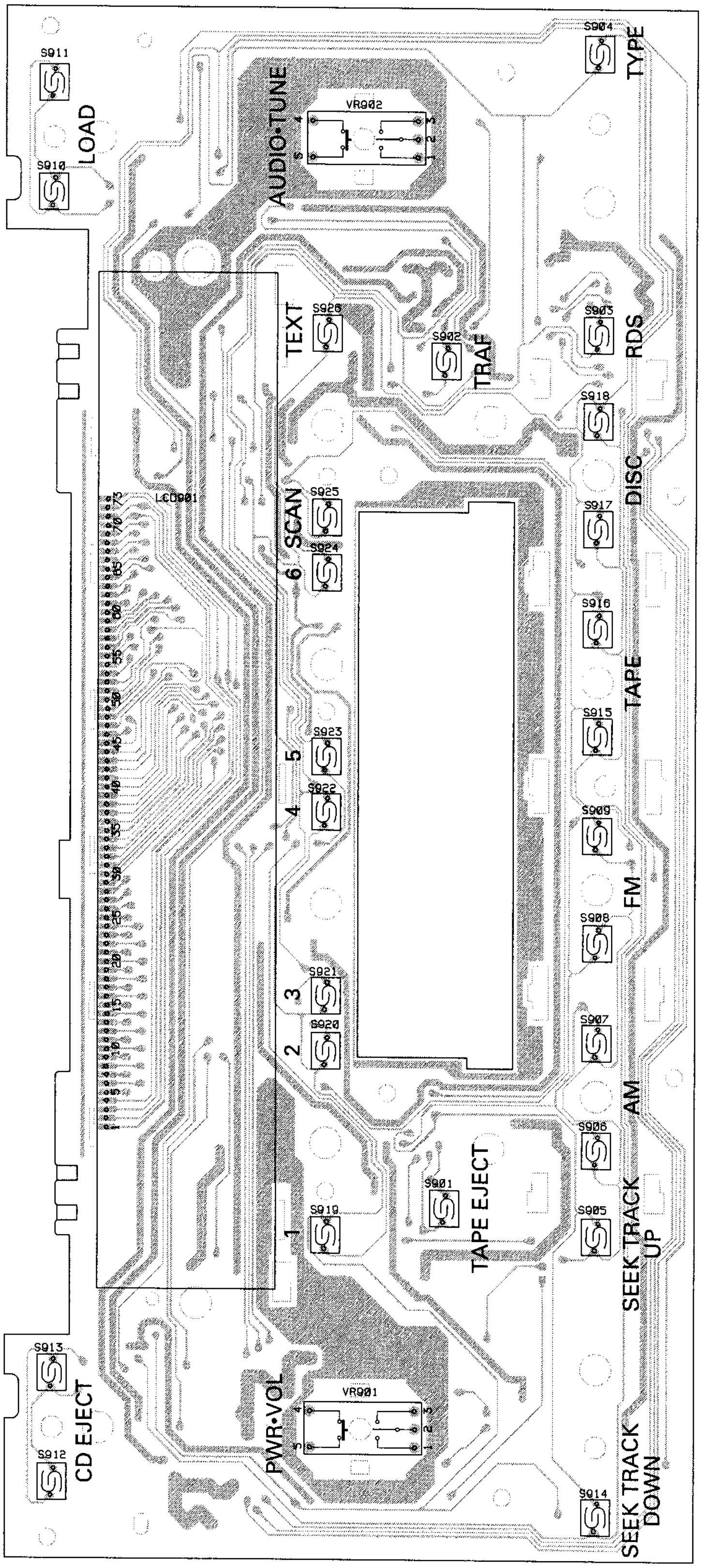

B

B KEYBOARD UNIT

SIDE B

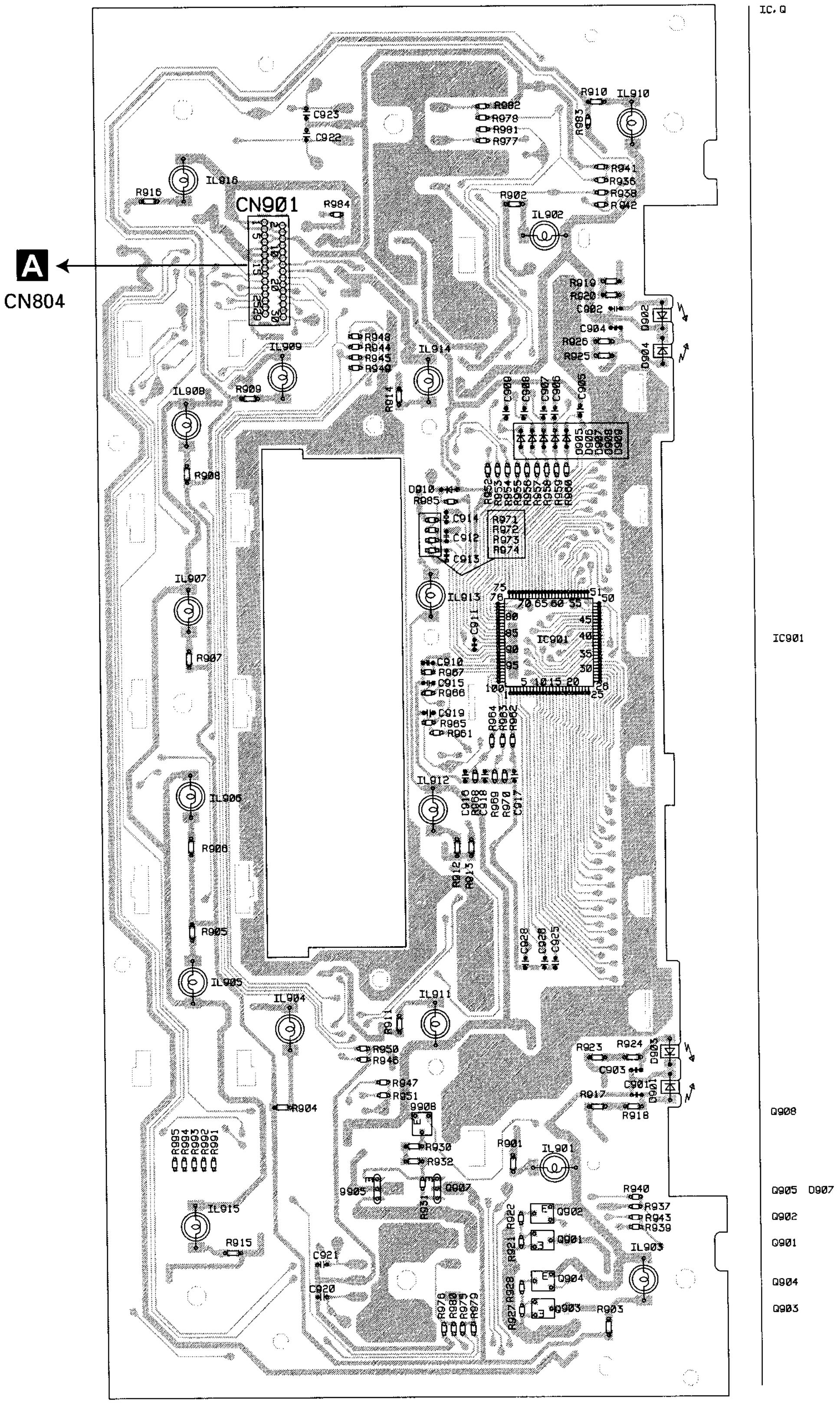

4.3 CD MECHANISM MODULE

C CONTROL UNIT (G2T)

SIDE A

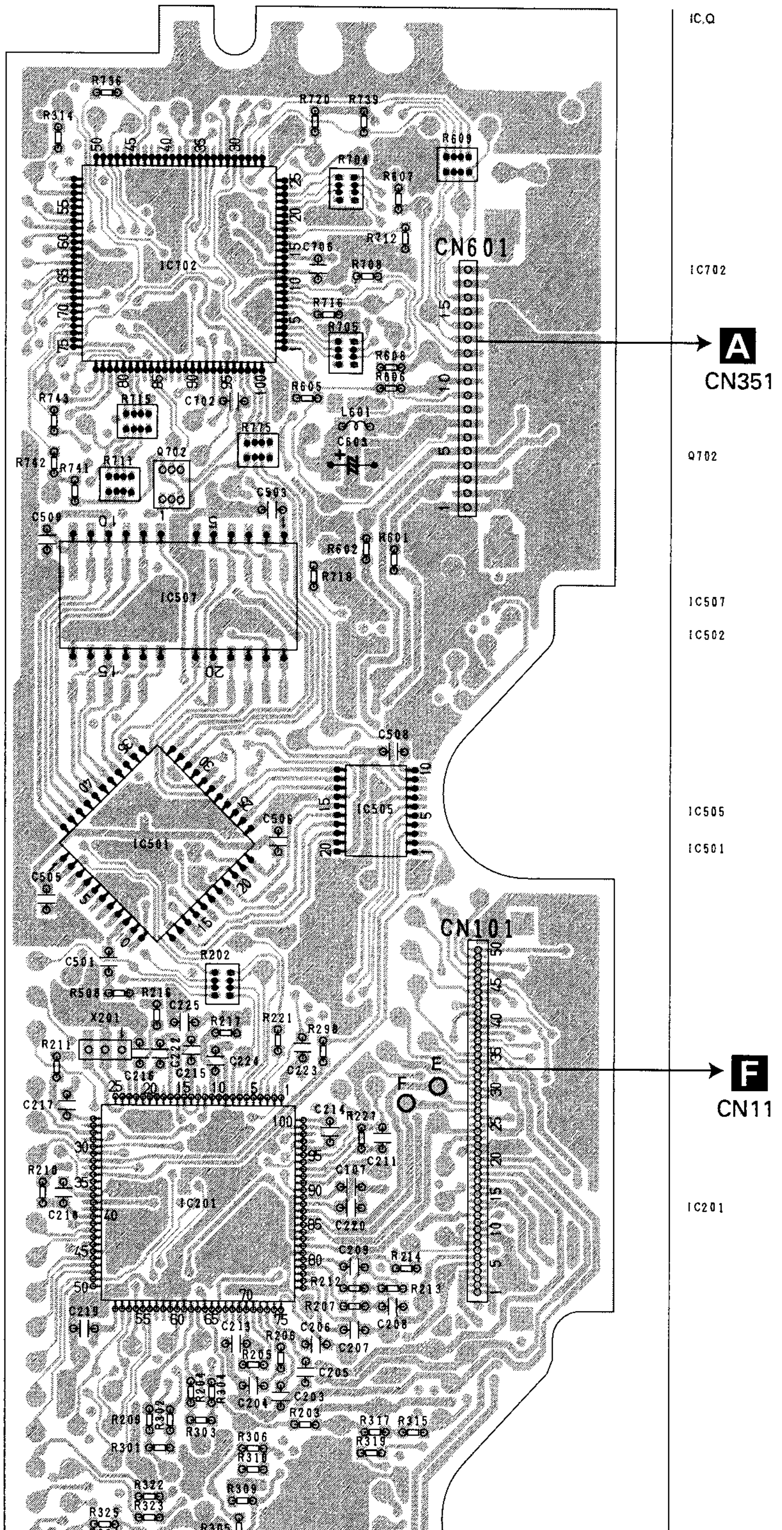

C CONTROL UNIT (G2T)

SIDE B

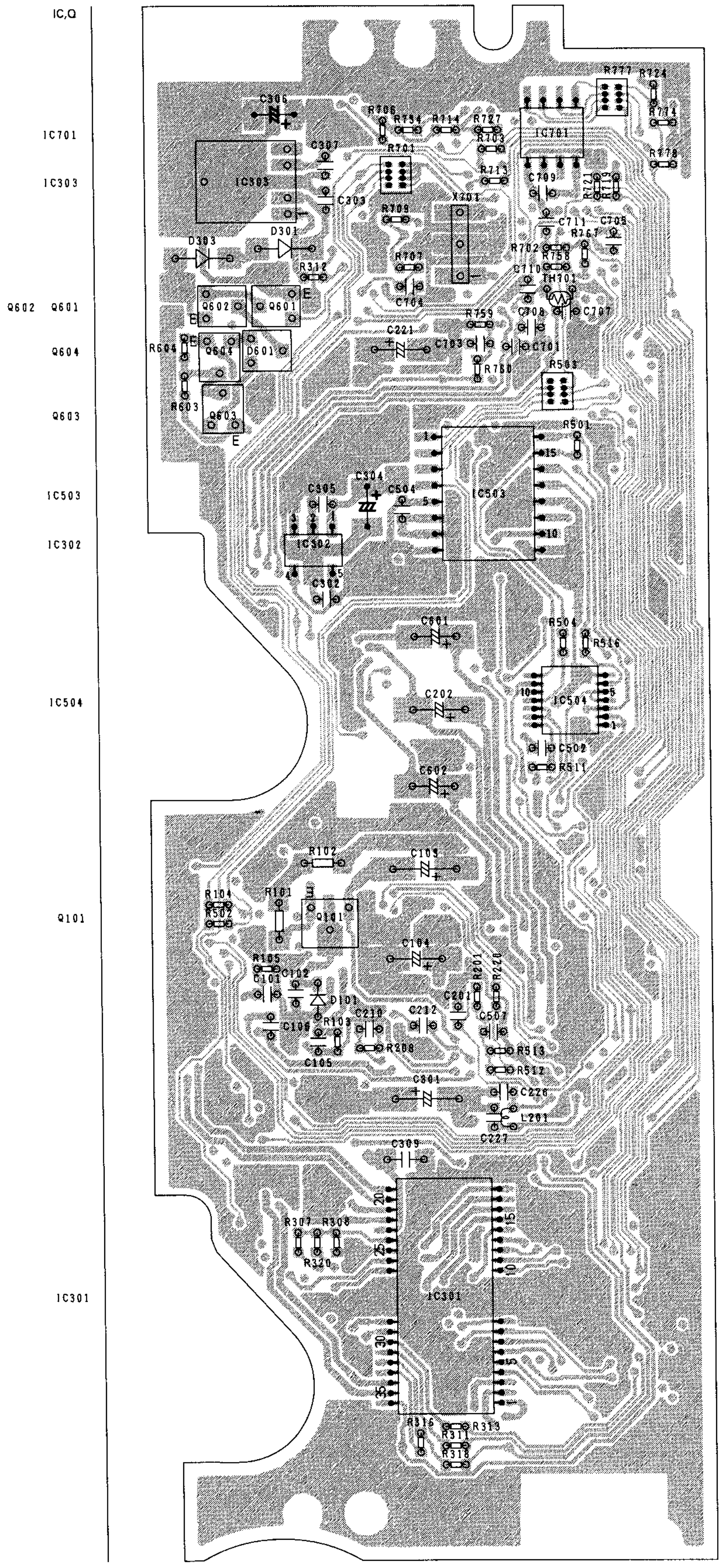

D PCB UNIT (LED)

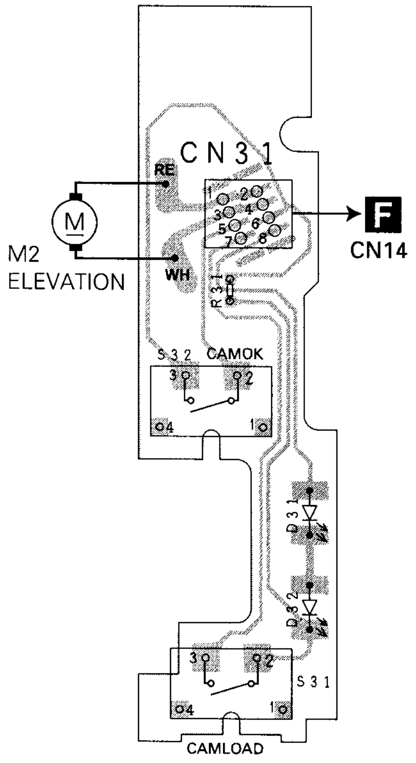

E PCB UNIT (LOAD)

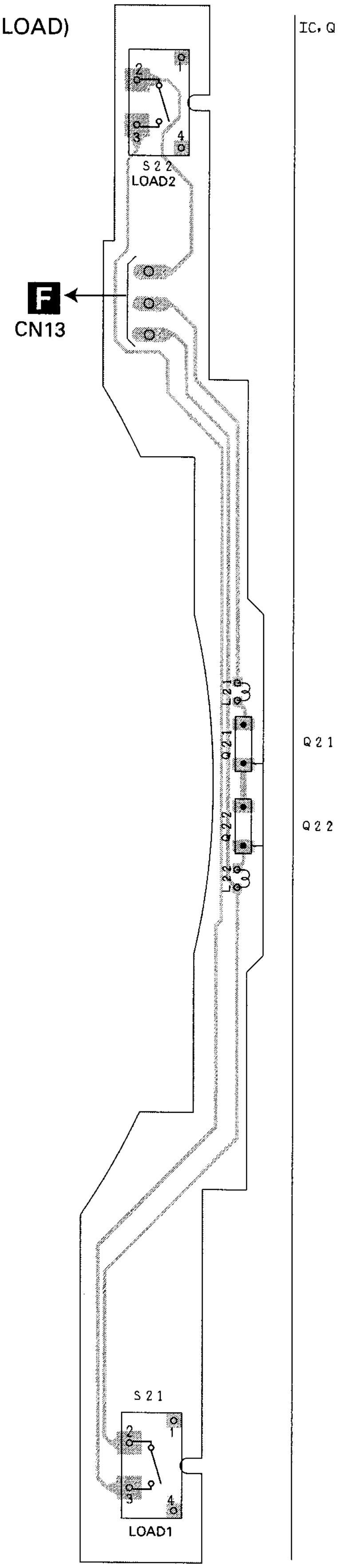

D E

F PCB UNIT (SIDE) — SIDE A

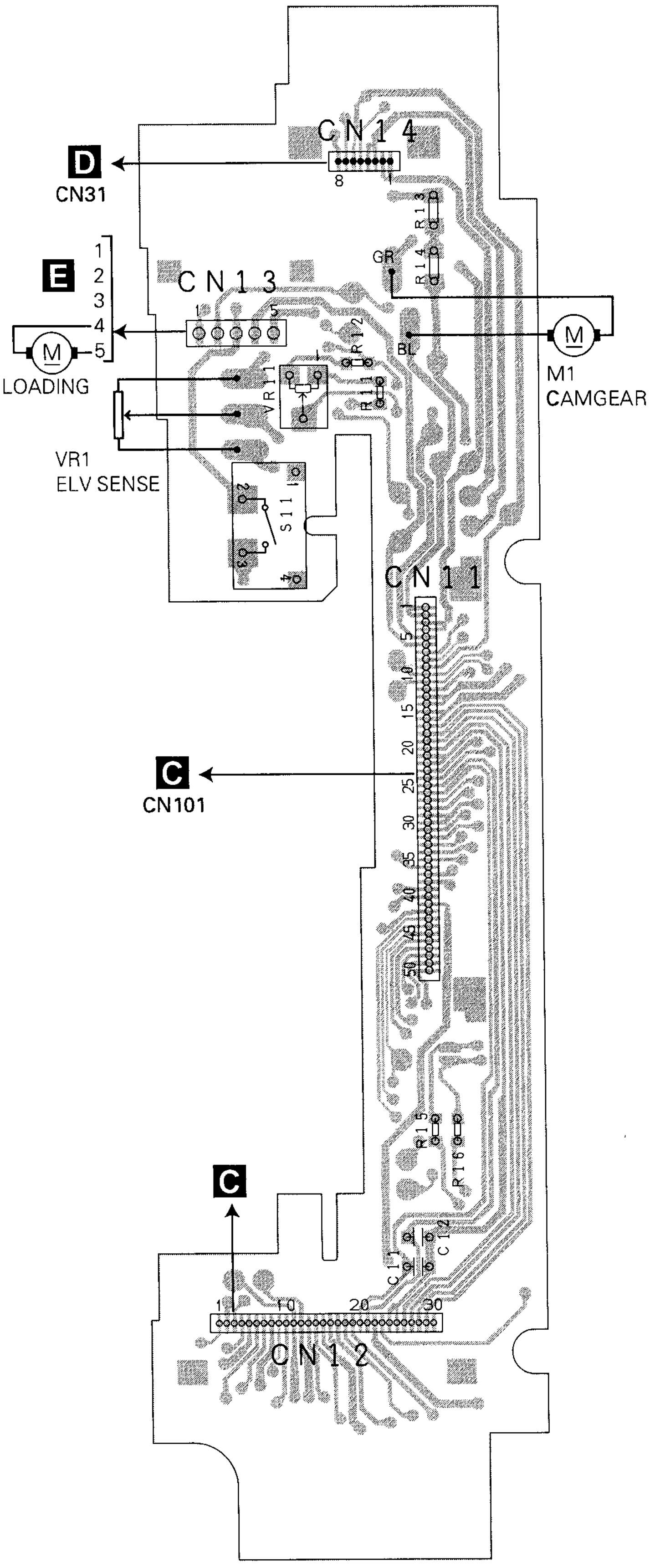

F PCB UNIT (SIDE) — SIDE B

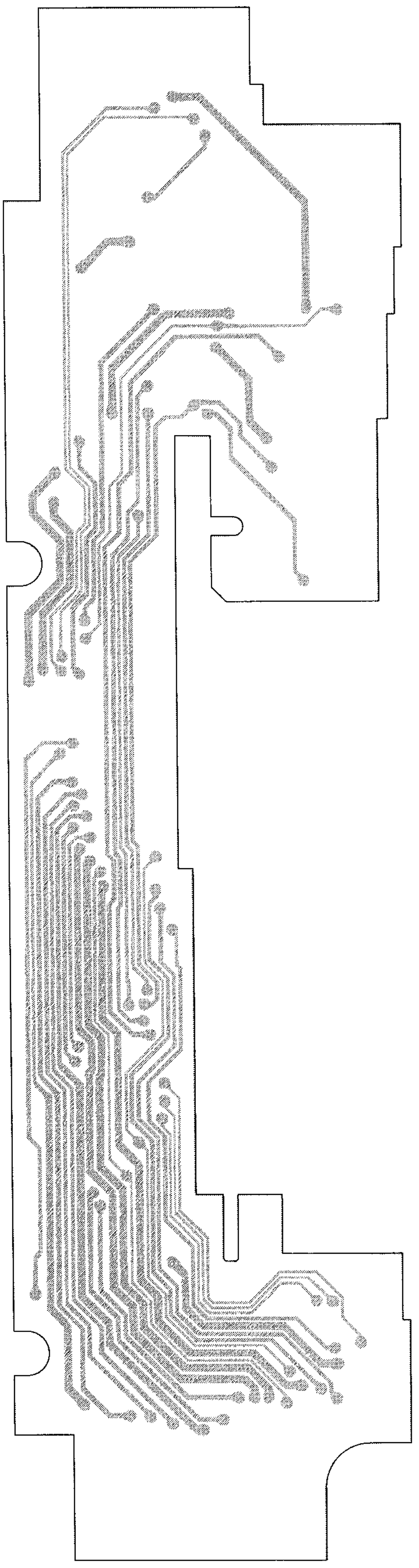

G PCB UNIT

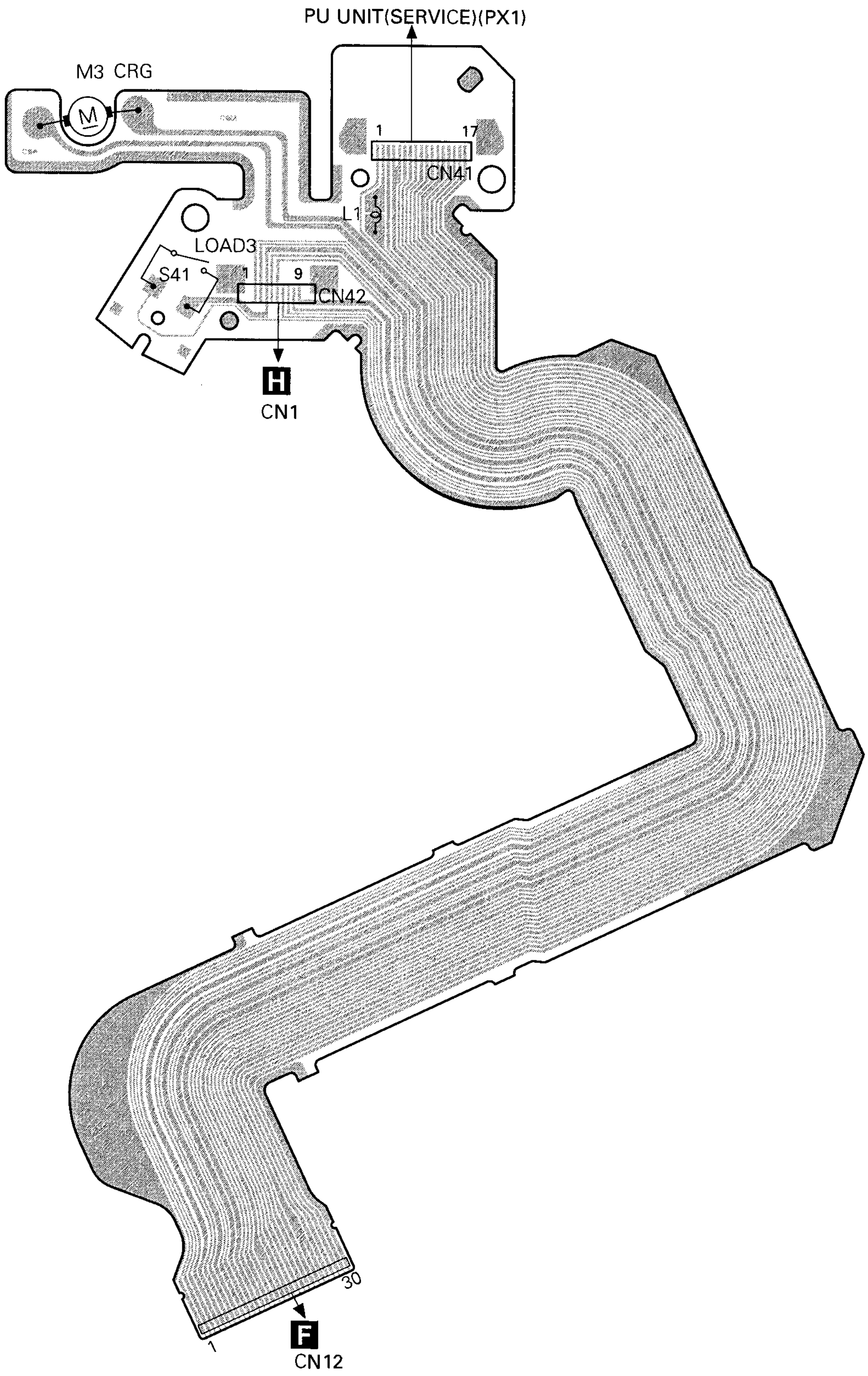

PU UNIT(SERVICE)(PX1)
M3 CRG
M
1
17
CN41
L1
LOAD3
S41
1
9
CN42
H
CN1
30
1
F
CN12

H PCB UNIT(M2 UNIT)

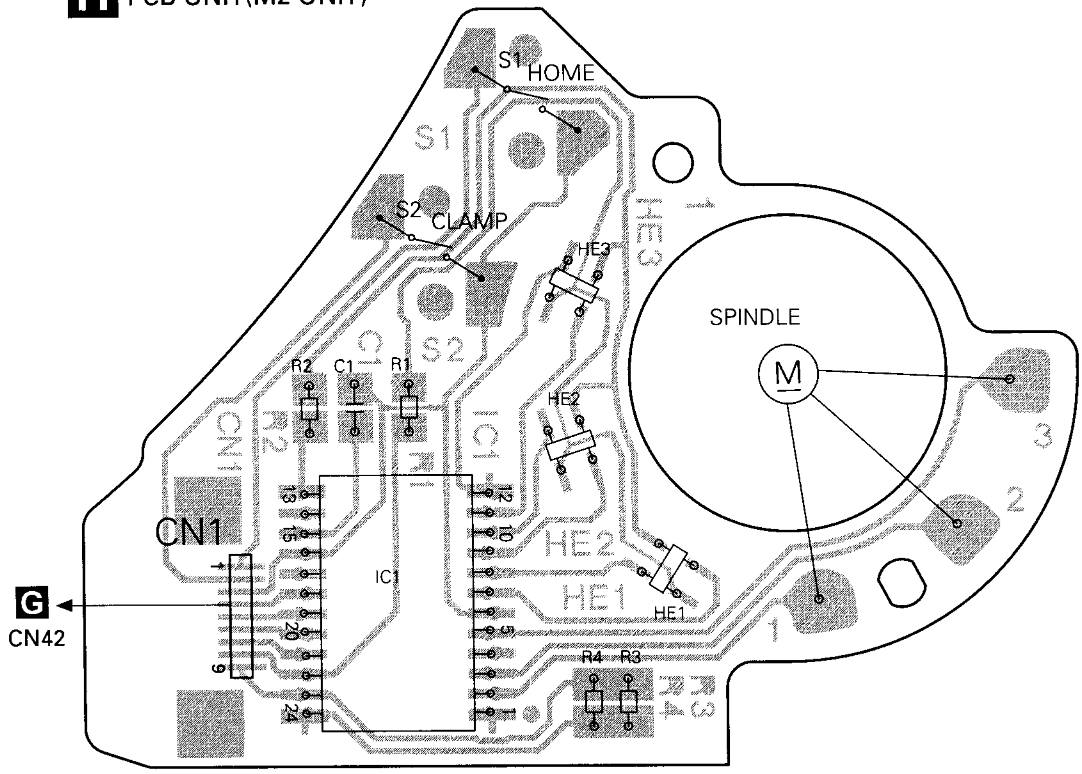

4.4 CASSETTE MECHANISM MODULE

I DECK UNIT

SIDE A

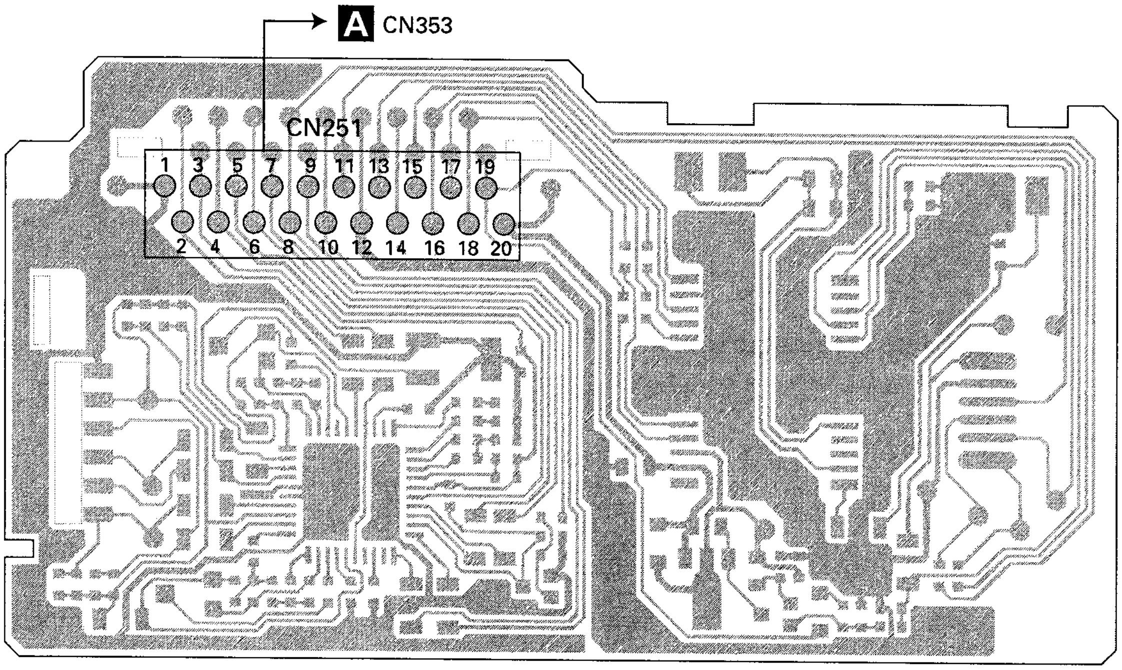

I DECK UNIT

SIDE B

IC,Q	ADJ
Q352	VR301
Q271	
Q351	
IC251	
IC351	VR302

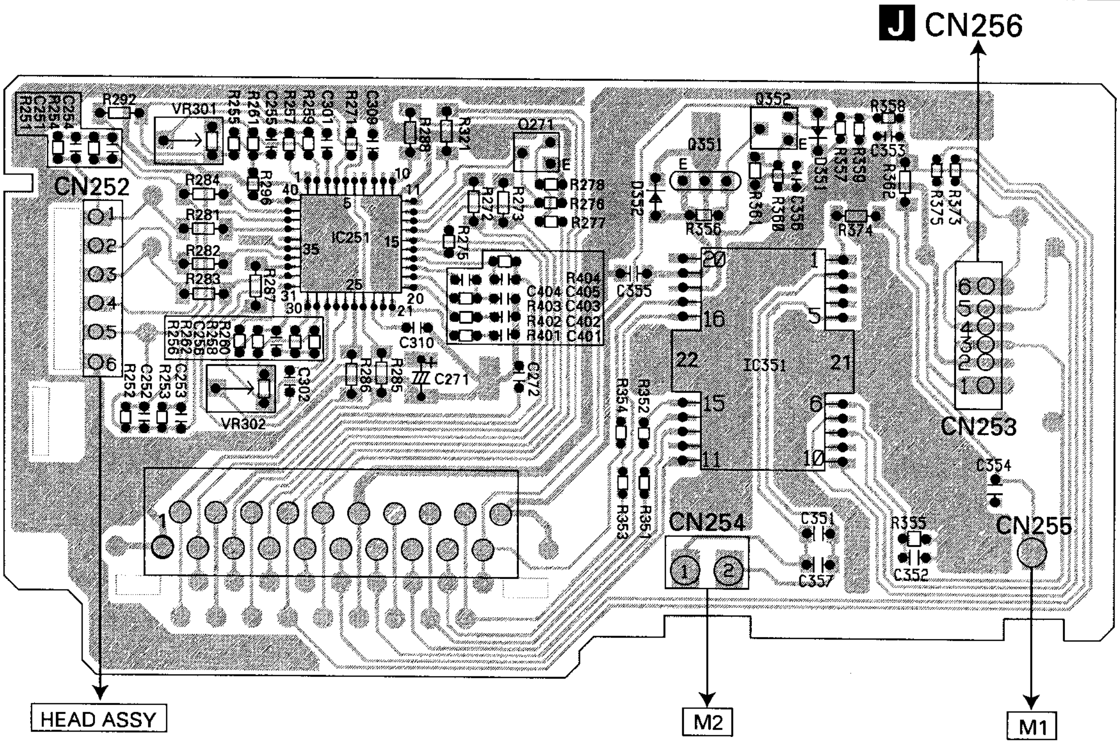

I

J SENSOR UNIT

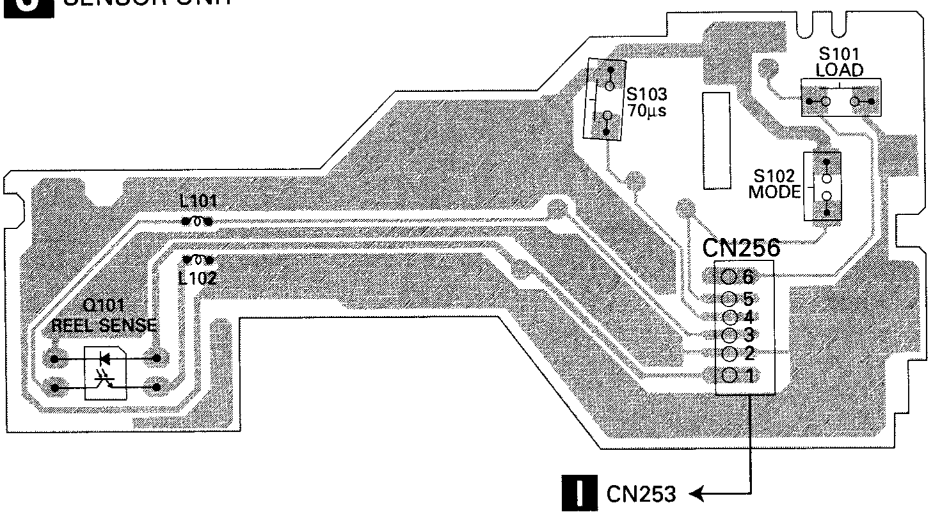

5. ELECTRICAL PARTS LIST

NOTE:
- *Parts whose parts numbers are omitted are subject to being not supplied.*
- *The part numbers shown below indicate chip components.*

Chip Resistor

RS1/○S○○○J,RS1/○○S○○○J

Chip Capacitor (except for CQS.....)

CKS....., CCS....., CSZS.....

A

Unit Number:CWM8004(FX-MG8527ZT/UC)
Unit Number:CWM8582(FX-MG8727ZT/UC)
Unit Name:Main Unit

MISCELLANEOUS

Circuit Symbol and No.	Part Name	Part No.
IC201	IC	NJM2068MD
IC202	IC	TC4052BF
IC203	IC	NJM2068MD
IC204	IC	NJM2068MD
IC252	IC	PM4009A
IC302	IC	TC4052BF
IC303	IC	NJM2068MD
IC304	IC	NJM2068MD
IC401	IC	NJM2068MD
IC501	IC	LA1061M
IC561	IC	HA12181FP
IC601	IC	PD5732A
IC602	IC	S-80735ANDZI
IC701	IC	HA12187FP
IC870	IC	S-81256SGUP-DIM
Q 201	Transistor	DTC144EU
Q 202	Transistor	DTC144EU
Q 203	Transistor	DTC144EU
Q 204	Transistor	FMG13
Q 205	Transistor	FMG13
Q 301	Transistor	DTC144EU
Q 302	Transistor	DTC144EU
Q 303	Transistor	DTC144EU
Q 304	Transistor	FMG13
Q 305	Transistor	FMG13
Q 351	Transistor	IMX1
Q 405	Transistor	DTC143TU
Q 406	Transistor	IMH3A
Q 451	Transistor	2SB1260
Q 452	Transistor	2SC2712
Q 453	Transistor	2SC2712
Q 497	Transistor	DTC114EU
Q 501	Transistor	IMX1
Q 502	Transistor	2SC2712
Q 504	Transistor	2SC2712
Q 561	Transistor	2SC2712
Q 563	Transistor	IMT2A
Q 564	Transistor	IMH1A
Q 644	Transistor	DTC114EU
Q 645	Transistor	2SA1162
Q 721	Transistor	DTA114EU

Circuit Symbol and No.	Part Name	Part No.
Q 722	Transistor	2SC2712
Q 801	Transistor	DTC114EU
Q 802	Transistor	IMX1
Q 805	Transistor	DTC144TUA
Q 806	Transistor	DTC144TUA
Q 807	Transistor	DTC144TUA
Q 808	Transistor	2SB1184F5
Q 809	Transistor	2SB1185
Q 811	Transistor	2SB1185
Q 812	Transistor	2SB1185
Q 813	Transistor	2SA1162
Q 814	Transistor	2SA1162
Q 815	Transistor	IMX1
Q 816	Transistor	2SC4081
Q 818	Transistor	2SB1184F5
Q 819	Transistor	2SA1162
Q 820	Transistor	IMX1
Q 822	Transistor	2SD2226K
Q 825	Transistor	2SA1162
Q 860	Transistor	2SA1162
Q 861	Transistor	DTC143EU
Q 862	Transistor	DTC144TUA
Q 863	Transistor	IMD3A
Q 864	Transistor	DTA114EU
Q 865	Transistor	DTA114EU
Q 866	Transistor	DTA114EU
Q 867	Transistor	DTA114EU
Q 870	Transistor	2SD1767
Q 882	Transistor	2SA1162
Q 884	Transistor	DTC124EU
D 203	Diode	HZU4R7(B2)
D 451	Diode	DAN202K
D 452	Diode	1SS355
D 472	Diode	MPG06G-6415G50
D 473	Diode	MPG06G-6415G50
D 474	Diode	1SS355
D 475	Diode	1SS355
D 497	Diode	UDZS20(B)
D 501	Diode	1SV241
D 502	Diode	1SV241
D 503	Diode	DAP202K
D 504	Diode	1SS355
D 703	Diode	UDZS18(B)
D 704	Diode	UDZS18(B)
D 801	Diode	1SS355
D 802	Diode	UDZS5R6(B)
D 803	Diode	RM4LFJ10
D 804	Diode	1SS355
D 805	Diode	UDZS20(B)

Circuit Symbol and No.	Part Name	Part No.
D 808	Diode	HZU8R2(B2)
D 809	Diode	HZU7R5(B3)
D 810	Diode	HZU8R2(B2)
D 811	Diode	1SS355
D 812	Diode	HZU7R5(B3)
D 813	Diode	1SS355
D 814	Diode	HZU8R2(B3)
D 860	Diode	HZU8R2(B3)
D 861	Diode	1SS355
D 862	Diodo	1SS355
D 863	Diode	DAP202K
D 864	Diode	1SS355
D 870	Diode	MPG06G-6415G50
D 871	Diode	UDZS16(B)
D 882	Diode	1SS355
L 251	Inductor	LCTA101J2520
L 252	Inductor	LCTC100K3216
L 351	Inductor	LCTC2R2K1608
L 352	Inductor	LCTC2R2K1608
L 353	Inductor	LCTC2R2K1608
L 354	Inductor	LCTC2R2K1608
L 355	Inductor	CTF1578
L 356	Inductor	LCTC2R2K1608
L 357	Inductor	CTF1306
L 358	Inductor	CTF1306
L 359	Inductor	CTF1306
L 350	Inductor	CTF1306
L 381	Inductor	CTF1306
L 363	Inductor	LFEA4R7J
L 505	Ferri-Inductor	LAU4R7K
L 506	Coil	CTB1112
L 507	Inductor	LCTC6R8K3216
L 508	Inductor	LCTC6R8K3216
L 509	Inductor	LCTC6R8K3216
L 510	Inductor	LCTA561J4532
L 511	Inductor	LCTA4R7J2520
L 512	Inductor	LCTA1R0J2520
L 513	Inductor	LCTA1R0J2520
L 514	Inductor	LCTA1R0J2520
L 561	Inductor	LCTA4R7J2520
L 601	Inductor	LCTA100J3225
L 801	Coil 350μH	CTH1276
CG501	Surge Protector	DSP-201M-A21F
CG502	Surge Protector	DSP-201M-A21F
X 251	Crystal Resonator 3.648MHz	CSS1447
X 801	Radiator 10.0MHz	CSS1577
VR561	Semi-fixed 10kΩ(B)	CCP1396
FU471	Fuse 5A	CEK1216
	FM/AM Tuner Unit	CWE1630
EF352	EMI Filter	CCG1163

RESISTORS

Circuit Symbol and No.	Part Name	Part No.
R 1		RS1/16S0R0J
R 2		RS1/16S0R0J
R 201		RS1/16S223J
R 202		RS1/16S223J
R 203		RS1/16S223J
R 204		RS1/16S223J
R 205		RS1/16S223J
R 206		RS1/16S223J
R 207		RS1/16S223J
R 208		RS1/16S223J
R 211		RS1/16S101J
R 212		RS1/16S101J
R 213		RS1/16S103J
R 214		RS1/16S103J
R 215		RS1/16S163J
R 216		RS1/16S163J
R 217		RS1/16S163J
R 218		RS1/16S163J
R 219		RS1/16S163J
R 220		RS1/16S163J
R 221		RS1/16S103J
R 222		RS1/16S103J
R 223		RS1/16S103J
R 224		RS1/16S103J
R 225		RS1/16S181J
R 226		RS1/16S181J
R 227		RS1/16S181J
R 228		RS1/16S181J
R 229		RS1/10S470J
R 230		RS1/10S470J
R 231		RS1/10S470J
R 232		RS1/10S470J
R 233		RS1/16S473J
R 234		RS1/16S473J
R 235		RS1/16S473J
R 237		RS1/16S473J
R 238		RS1/16S473J
R 239		RS1/16S473J
R 240		RS1/16S473J
R 241		RS1/16S222J
R 243		RS1/16S103J
R 244		RS1/16S103J
R 245		RS1/16S103J
R 246		RS1/16S103J
R 247		RS1/16S562J
R 248		RS1/16S562J
R 249		RS1/16S562J
R 250		RS1/16S562J
R 257		RS1/16S102J
R 261		RS1/16S225J
R 285		RS1/16S104J
R 286		RS1/16S104J
R 287		RS1/16S104J
R 288		RS1/16S104J
R 313		RS1/16S103J
R 314		RS1/16S103J
R 315		RS1/16S163J
R 316		RS1/16S163J
R 317		RS1/16S163J
R 318		RS1/16S163J
R 319		RS1/16S163J
R 320		RS1/16S163J
R 321		RS1/16S103J
R 322		RS1/16S103J
R 323		RS1/16S103J
R 324		RS1/16S103J
R 325		RS1/16S181J

Circuit Symbol and No.	Part Name	Part No.
R 326		RS1/16S181J
R 327		RS1/16S181J
R 328		RS1/16S181J
R 329		RS1/10S470J
R 330		RS1/10S470J
R 331		RS1/10S470J
R 332		RS1/10S470J
R 333		RS1/16S473J
R 334		RS1/16S473J
R 335		RS1/16S473J
R 337		RS1/16S473J
R 338		RS1/16S473J
R 339		RS1/18S473J
R 340		RS1/16S473J
R 351		RS1/16S103J
R 352		RS1/16S103J
R 353		RS1/16S223J
R 354		RS1/16S223J
R 355		RS1/16S273J
R 356		RS1/16S273J
R 357		RS1/16S102J
R 358		RS1/16S102J
R 359		RS1/16S100J
R 369		RS1/16S100J
R 401		RS1/16S432J
R 402		RS1/16S432J
R 407		RS1/16S102J
R 408		RS1/16S102J
R 413		RS1/18S102J
R 414		RS1/16S102J
R 417	(FX-MG8527ZT/UC)	RS1/16S623J
R 417	(FX-MG8727ZT/UC)	RS1/16S913J
R 418	(FX-MG8527ZT/UC)	RS1/16S623J
R 416	(FX-MG8727ZT/UC)	RS1/16S913J
R 427		RS1/16S203J
R 426		RS1/16S203J
R 429		RS1/16S683J
R 430		RS1/16S683J
R 431		RS1/16S473J
R 432		RS1/16S473J
R 433		RS1/16S101J
R 451		RS1/16S102J
R 452		RS1/16S223J
R 453		RS1/16S823J
R 454		RS1/16S181J
R 455		RS1/16S181J
R 456		RS1/16S181J
R 457		RS1/16S181J
R 458		RS1/16S181J
R 459		RS1/16S223J
R 460		RS1/16S223J
R 474		RS1/8S103J
R 497		RS1/8S221J
R 501		RS1/16S225J
R 502		RS1/16S225J
R 503		RS1/16S225J
R 504		RS1/16S225J
R 505		RS1/16S222J
R 506		RS1/16S104J
R 507		RS1/16S103J

Circuit Symbol and No.	Part Name	Part No.
R 508		RS1/16S103J
R 509		RS1/16S334J
R 510		RS1/16S101J
R 511		RS1/16S101J
R 512		RS1/16S104J
R 513		RS1/16S104J
R 514		RS1/16S103J
R 515		RS1/16S182J
R 516		RS1/16S683J
R 517		RS1/16S224J
R 518		RS1/16S473J
R 519		RS1/16S473J
R 520		RS1/16S102J
R 522		RS1/16S222J
R 525		RS1/16S473J
R 526		RS1/16S681J
R 527		RS1/16S681J
R 528		RS1/16S681J
R 529		RS1/16S103J
R 530		RS1/16S681J
R 531		RS1/16S473J
R 532		RS1/16S473J
R 533		RS1/16S472J
R 534		RS1/16S393J
R 535		RS1/16S473J
R 536		RS1/16S103J
R 537		RS1/16S473J
R 538		RS1/16S681J
R 539		RS1/16S681J
R 543		RS1/16S681J
R 546		RS1/16S103J
R 547		RS1/16S103J
R 548		RS1/16S221J
R 551		RS1/16S0R0J
R 552		RS1/16S0R0J
R 561		RS1/16S104J
R 562		RS1/16S123J
R 563		RS1/16S105J
R 564		RS1/16S682J
R 567		RS1/16S822J
R 568		RS1/16S222J
R 569		RS1/16S184J
R 570		RS1/16S223J
R 571		RS1/16S473J
R 582		RS1/16S332J
R 583		RS1/16S332J
R 584		RS1/16S332J
R 565		RS1/16S332J
R 601		RS1/16S102J
R 602		RS1/16S473J
R 603		RS1/16S102J
R 605		RS1/16S102J
R 606		RS1/16S0R0J
R 607		RS1/16S104J
R 606		RS1/16S102J
R 609		RS1/16S681J
R 610		RS1/16S0R0J
R 611		RS1/16S0R0J
R 612		RS1/16S102J
R 613		RS1/16S0R0J

Circuit Symbol and No.	Part Name	Part No.
R 614		RS1/16S102J
R 615		RS1/16S102J
R 616		RS1/16S102J
R 617		RS1/16S102J
R 618		RS1/16S102J
R 619		RS1/16S0R0J
R 620		RS1/16S0R0J
R 621		RS1/16S681J
R 622		RS1/16S0R0J
R 623		RS1/16S473J
R 624		RS1/16S473J
R 625		RS1/16S473J
R 626		RS1/16S473J
R 627		RS1/16S473J
R 629		RS1/16S472J
R 631		RS1/16S0R0J
R 632		RS1/16S102J
R 633		RS1/16S102J
R 634		RS1/16S102J
R 635		RS1/16S471J
R 636		RS1/16S222J
R 637		RS1/16S102J
R 638		RS1/16S102J
R 641		RS1/16S473J
R 642		RS1/16S104J
R 643		RS1/16S104J
R 644		RS1/16S473J
R 645		RS1/16S102J
R 646		RS1/16S103J
R 647		RS1/16S102J
R 648		RS1/16S102J
R 651		RS1/16S0R0J
R 664		RS1/16S102J
R 655		RS1/16S102J
R 656		RS1/16S102J
R 657		RS1/16S102J
R 658		RS1/16S223J
R 659		RS1/16S102J
R 660		RS1/16S102J
R 661		RS1/16S102J
R 662		RS1/16S102J
R 663		RS1/16S102J
R 664		RS1/16S102J
R 665		RS1/16S102J
R 666		RS1/16S681J
R 667		RS1/16S473J
R 668		RS1/16S473J
R 669		RS1/16S473J
R 670		RS1/16S473J
R 671		RS1/16S473J
R 672		RS1/16S473J
R 673		RS1/16S473J
R 674		RS1/16S473J
R 675		RS1/16S473J
R 676		RS1/16S102J
R 677		RS1/16S102J
R 676		RS1/16S102J
R 679		RS1/16S102J
R 680		RS1/16S102J
R 681		RS1/16S102J

Circuit Symbol and No.	Part Name	Part No.
R 684		RS1/16S102J
R 685		RS1/16S102J
R 687		RS1/16S473J
R 689		RS1/16S473J
R 692		RS1/16S473J
R 693		RS1/16S0R0J
R 698		RS1/16S102J
R 699		RS1/16S473J
R 701		RS1/16S473J
R 703		RS1/4S101J
R 704		RS1/4S101J
R 705		RS1PMF680J
R 711		RS1/16S473J
R 721		RS1/16S102J
R 722		RS1/16S473J
R 723		RS1/16S473J
R 801		RS1/8S222J
R 802		RS1/8S472J
R 803		RS1/8S472J
R 804		RS1/8S472J
R 805		RS1/8S472J
R 606		RS1/8S472J
R 807		RS1/8S221J
R 810		RS1/16S104J
R 811		RS1/16S104J
R 812		RS1/16S104J
R 819		RS1/16S102J
R 820		RS1/16S123J
R 821		RS1/16S103J
R 822		RS1/16S103J
R 823		RS1/16S223J
R 824		RS1/16S102J
R 825		RS1/16S331J
R 826		RS1/16S103J
R 827		RS1/16S471J
R 828		RS1/16S221J
R 829		RS1/16S223J
R 830		RS1/10S221J
R 831		RS1/16S331J
R 832		RS1/16S471J
R 833		RS1/16S221J
R 840		RS1/4S1R5J
R 841		RS1/4S1R5J
R 842		RS1/4S1R5J
R 843		RS1/4S1R5J
R 844		RS1/16S471J
R 845		RS1/16S471J
R 846		RS1/16S105J
R 647		RS1/10S361J
R 848		RS1/16S332J
R 849		RS1/16S562J
R 850		RS1/4S2R2J
R 851		RS1/16S471J
R 852		RS1/16S105J
R 853		RS1/16S102J
R 854		RS1/16S332J
R 855		RS1/16S562J
R 856		RS1/16S103J
R 857		RS1/16S103J
R 860		RS1/16S223J

Circuit Symbol and No.	Part Name	Part No.
R 861		RS1/16S103J
R 882		RS1/16S104J
R 863		RS1/16S223J
R 865		RS1/16S103J
R 866		RS1/16S103J
R 867		RS1/16S472J
R 868		RS1/16S102J
R 869		RS1/16S102J
R 870		RS1/10S102J
R 871		RS1/16S472J
R 882		RD1/4PU121J
R 884		RS1/16S223J
R 886		RS1/16S472J
R 888		RS1/16S473J

CAPACITORS

Circuit Symbol and No.	Part Name	Part No.
C 201		CEALNP4R7M16
C 202		CEALNP4R7M16
C 203		CEALNP4R7M16
C 284		CEALNP4R7M16
C 205		CCSRCH330J50
C 206		CCSRCH330J50
C 207		CCSRCH330J50
C 208		CCSRCH330J50
C 209		CKSRYB102K50
C 210		CKSRYB105K10
C 215		CEALNP4R7M16
C 216		CEALNP4R7M16
C 217		CEALNP4R7M16
C 218		CEALNP4R7M16
C 219		CCSRCH220J50
C 220		CCSRCH220J50
C 221		CCSRCH220J50
C 222		CCSRCH220J50
C 223	4.7μF/35V	CCH1016
C 224	4.7μF/35V	CCH1016
C 225	4.7μF/35V	CCH1016
C 226	4.7μF/35V	CCH1016
C 227		CCSRCH221J50
C 228		CCSRCH221J50
C 229		CCSRCH221J50
C 230		CCSRCH221J50
C 231		CKSRYB473K50
C 232		CEAL101M6R3
C 233		CKSRYB102K50
C 235	4.7μF/35V	CCH1016
C 236	4.7μF/35V	CCH1016
C 237	4.7μF/35V	CCH1016
C 238	4.7μF/35V	CCH1016
C 243		CKSQYB102K50
C 244		CKSQYB102K50
C 245		CKSQYB102K50
C 246		CKSQYB102K50
C 251		CKSRYB104K16
C 253		CEAL220M6R3
C 254		CKSRYB104K16
C 256		CCSRCH270J50
C 257		CCSRCH270J50
C 259		CKSRYB104K16

Circuit Symbol and No.	Part Name	Part No.
C 260		CCSRCH471J50
C 261		CCSRCH471J50
C 262		CEAL4R7M35
C 263		CKSRYB473K50
C 281		CKSRYB182K50
C 282		CKSRYB182K50
C 283		CKSRYB182K50
C 284		CKSRYB182K50
C 309		CKSRYB102K50
C 310		CKSRYB105K10
C 319		CCSRCH220J50
C 320		CCSRCH220J50
C 321		CCSRCH220J50
C 322		CCSRCH220J50
C 323	4.7μF/35V	CCH1016
C 324	4.7μF/35V	CCH1016
C 325	4.7μF/35V	CCH1016
C 326	4.7μF/35V	CCH1016
C 327		CCSRCH221J50
C 328		CCSRCH221J50
C 329		CCSRCH221J50
C 330		CCSRCH221J50
C 335	4.7μF/35V	CCH1016
C 336	4.7μF/35V	CCH1016
C 337	4.7μF/35V	CCH1016
C 338	4.7μF/35V	CCH1016
C 351		CEAL4R7M35
C 352		CKSRYB103K50
C 353	4.7μF/35V	CCH1016
C 354	4.7μF/35V	CCH1016
C 355		CEAL101M10
C 356		CEAL100M16
C 357		CEAL220M10
C 381		CKSRYB182K50
C 382		CKSRYB182K50
C 383		CKSRYB182K50
C 384		CKSRYB182K50
C 401		CKSRYB183K50
C 402		CKSRYB183K50
C 403	4.7μF/35V	CCH1016
C 404	4.7μF/35V	CCH1016
C 406		CKSRYB102K50
C 411		CKSRYB104K16
C 412		CKSRYB104K16
C 415		CKSRYB105K10
C 416		CKSRYB105K10
C 417		CCSRCH331J50
C 418		CCSRCH331J50
C 421		CEAL470M6R3
C 480		CKSQYB102K50
C 492		CKSRYB473K50
C 493		CCSQCH221J50
C 494		CCSQCH221J50
C 497		CCSRCH221J50
C 503		CKSQYB103K50
C 504		CKSRYB222K50
C 505		CKSRYB222K50
C 506		CKSRYB222K50
C 507		CKSRYB222K50
C 508		CKSRYB103K50

Circuit Symbol and No.	Part Name	Part No.
C 509		CKSRYB103K50
C 510		CEAL100M16
C 511		CKSRYB472K50
C 512		CEAL100M16
C 513		CKSRYB473K50
C 514		CEAL2R2M50
C 515		CKSRYB102K50
C 516		CKSRYB103K50
C 517		CKSRYB103K50
C 518		CKSRYB392K50
C 519		CKSRYB103K50
C 520		CKSRYB103K50
C 521		CEAT101M10
C 522		CKSRYB103K50
C 523		CEAL100M16
C 524		CKSRYB472K50
C 529		CKSQYB103K50
C 530		CCSRCH100D50
C 561		CEAL3R3M50
C 562		CKSRYB333K16
C 563		CEALNP1R0M50
C 564		CQMA663J50
C 565		CQMA333J50
C 566		CQMA333J50
C 567		CQMA333J50
C 568		CKSRYB105K10
C 569		CKSRYB333K16
C 570		CKSRYB103K50
C 571		CKSRYB682K50
C 572		CEAL101M10
C 573		CKSRYB392K50
C 574		CKSRYB334K10
C 575		CKSRYB102K50
C 585		CKSRYB223K50
C 586		CKSRYB223K50
C 601		CKSRYB102K50
C 602		CKSRYB103K50
C 603		CKSRYB103K50
C 604		CKSRYB104K18
C 605		CEAL220M6R3
C 645		CKSRYB103K50
C 646		CKSRYB102K50
C 671		CCSRCH101J50
C 672		CCSRCH101J50
C 673		CCSRCH101J50
C 674		CCSRCH101J50
C 675		CCSRCH101J50
C 701		CKSRYB103K50
C 703		CCSRCH221J50
C 704		CCSRCH221J50
C 801		CKSRYB102K50
C 802		CEAL1R0M50
C 803		CKSRYB102K50
C 804	2200μF/16V	CCH1186
C 805		CKSQYB473K50
C 806		CKSRYB102K50
C 807		CEAL1R0M50
C 808		CKSRYB102K50
C 814		CEAL1R0M50
C 815		CEAL1R0M50

Circuit Symbol and No.	Part Name	Part No.
C 616		CKSRYB103K50
C 817	100μF/10V	CCH1402
C 818		CKSRYB103K50
C 819	100μF/10V	CCH1402
C 820		CKSRYB103K50
C 824		CKSRYB472K50
C 625	100μF/10V	CCH1402
C 826		CKSRYB472K50
C 827	100μF/10V	CCH1402
C 629		CKSRYB103K50
C 830		CKSRYB103K50
C 831		CKSRYB103K50
C 861		CEAL101M6R3
C 666		CEAL100M16
C 867		CEAL100M16
C 670		CKSRYB103K50
C 871		CKSRYB103K50
C 872	2200μF/16V	CCH1186
C 873		CKSRYB105K10
C 675		CCSRCH101J50
C 883		CKSRYB103K50

B

Unit Number:CWS1342
Unit Name:Keyboard Unit

MISCELLANEOUS

IC901	IC	LC75604W
Q 901	Transistor	2SA1162
Q 902	Transistor	DTC143EK
Q 903	Transistor	2SA1162
Q 904	Transistor	DTC143EK
Q 905	Transistor	2SB1132
Q 907	Transistor	2SB1132
Q 908	Transistor	DTC143EK
D 901	Chip LED	HGG1105W-RR(CDE)
D 902	Chip LED	HGG1105W-RR(CDE)
D 903	Chip LED	HAA1105W-RR(CDE)
D 904	Chip LED	HAA1105W-RR(CDE)
D 905	Diode	1SS355
D 906	Diode	1SS355
D 907	Diode	1SS355
D 908	Diode	1SS355
D 909	Diode	1SS355
D 910	Diode	HZU5R6(B1)
IL 901	Lamp 8V 60mA	CEL1712
IL 902	Lamp 8V 60mA	CEL1712
IL 903	Lamp 8V 60mA	CEL1740
IL 904	Lamp 8V 60mA	CEL1740
IL 905	Lamp 6V 60mA	CEL1740
IL 906	Lamp 8V 60mA	CEL1740
IL 907	Lamp 6V 60mA	CEL1740
IL 908	Lamp 6V 60mA	CEL1740
IL 909	Lamp 8V 60mA	CEL1740
IL 910	Lamp 8V 60mA	CEL1740
IL 911	Lamp 8V 60mA	CEL1740
IL 912	Lamp 8V 60mA	CEL1740
IL 913	Lamp 6V 60mA	CEL1740

Circuit Symbol and No.	Part Name	Part No.
IL 914	Lamp 8V 60mA	CEL1740
IL 915	Lamp 8V 60mA	CEL1740
IL 916	Lamp 8V 60mA	CEL1740
VR901	Enccder(PWR•VOL)	CSD1078
VR902	Enccder(AUDIO•TUNE)	CSD1082
LCD901	LCD	CAW1700

RESISTORS

R 901		RS1/10S0R0J
R 902		RS1/10S0R0J
R 903		RS1/10S8R2J
R 904		RS1/10S8R2J
R 905		RS1/10S8R2J
R 906		RS1/10S8R2J
R 907		RS1/10S8R2J
R 908		RS1/10S8R2J
R 909		RS1/10S8R2J
R 910		RS1/10S8R2J
R 911		RS1/10S8R2J
R 912		RS1/10S8R2J
R 913		RS1/10S8R2J
R 914		RS1/10S8R2J
R 915		RS1/10S0R0J
R 916		RS1/10S0R0J
R 917		RS1/10S151J
R 918		RS1/10S151J
R 919		RS1/10S151J
R 920		RS1/10S151J
R 921		RS1/16S103J
R 922		RS1/16S332J
R 923		RS1/10S151J
R 924		RS1/10S151J
R 925		RS1/10S151J
R 926		RS1/10S151J
R 927		RS1/16S103J
R 928		RS1/16S332J
R 930		RS1/10S271J
R 931		RS1/16S103J
R 932		RS1/10S221J
R 936		RS1/16S0R0J
R 937		RS1/16S0R0J
R 938		RS1/16S0R0J
R 939		RS1/16S0R0J
R 944		RS1/16S0R0J
R 945		RS1/16S0R0J
R 946		RS1/16S0R0J
R 947		RS1/16S0R0J
R 952		RS1/16S102J
R 953		RS1/16S102J
R 954		RS1/16S102J
R 955		RS1/16S102J
R 956		RS1/16S102J
R 957		RS1/16S102J
R 958		RS1/16S102J
R 959		RS1/16S102J
R 960		RS1/16S102J
R 961		RS1/16S103J
R 962		RS1/16S102J
R 963		RS1/16S102J

Circuit Symbol and No.	Part Name	Part No.
R 964		RS1/16S102J
R 965		RS1/16S102J
R 966		RS1/16S681J
R 967		RS1/16S393J
R 968		RS1/16S223J
R 969		RS1/16S223J
R 971		RS1/16S471J
R 972		RS1/16S222J
R 973		RS1/16S222J
R 974		RS1/16S222J
R 975		RS1/16S0R0J
R 976		RS1/16S0R0J
R 977		RS1/16S0R0J
R 978		RS1/16S0R0J
R 991		RS1/16S0R0J

CAPACITORS

C 901		CKSRYB104K16
C 902		CKSRYB104K16
C 903		CKSRYB104K16
C 904		CKSRYB104K16
C 910		CKSRYB102K50
C 911		CKSRYB474K10
C 912		CKSRYB104K16
C 913		CKSRYB104K16
C 914		CKSRYB104K16
C 915		CKSRYB103K50
C 916		CCSRCH101J50
C 917		CCSRCH101J50
C 920		CCSRCH101J50
C 921		CCSRCH101J50
C 922		CCSRCH101J50
C 923		CCSRCH101J50

C

Unit Number:CWX2649
Unit Name:Control Unit(G2T)

MISCELLANEOUS

IC201	IC	UPD63711GC
IC301	IC	BD7962FM
IC302	IC	S-818A33AUC-BGN
IC303	IC	BA05SFP
IC501	IC	SM5903BFP
IC504	IC	TC74VHCT08AFT
IC505	IC	TC74VHC541FT
IC507	IC	MSM51V17400F6TFT
IC702	IC	PD5748C
Q 101	Transistor	2SB1132
Q 601	Transistor	DTC114EK
Q 602	Transistor	DTA123JK
Q 603	Transistor	DTC314TK
Q 604	Transistor	DTC314TK
Q 702	Transistor	UMD3N
D 101	Diode	1SS355
D 301	Diode	S1G-6904G2P
D 303	Diode	S1G-6904G2P

Circuit Symbol and No.	Part Name	Part No.
D 601	Chip Diode	MA151WA
L 601	Inductor	CTF1295
TH701	Thermistor	CCX1015
X 201	Radiator 16.93MHz	CSS1581
X 701	Radiator 10.00MHz	CSS1428

RESISTORS

Circuit Symbol and No.	Part Name	Part No.
R 101		RS1/8S120J
R 102		RS1/8S100J
R 103		RS1/16S222J
R 104		RS1/16S102J
R 105		RS1/16S0R0J
R 201		RS1/16S104J
R 202		RAB4CQ681J
R 203		RS1/16S0R0J
R 204		RS1/16S0R0J
R 205		RS1/16S103J
R 206		RS1/16S393J
R 207		RS1/16S0R0J
R 209		RS1/16S0R0J
R 210		RS1/16S0R0J
R 211		RS1/16S0R0J
R 212		RS1/16S562J
R 213		RS1/16S153J
R 214		RS1/16S123J
R 215		RS1/16S0R0J
R 216		RS1/16S0R0J
R 217		RS1/16S0R0J
R 220		RS1/16S471J
R 221		RS1/16S681J
R 298		RS1/16S0R0J
R 301		RS1/16S103J
R 302		RS1/16S153J
R 303		RS1/16S103J
R 304		RS1/16S103J
R 305		RS1/16S272J
R 306		RS1/16S272J
R 307		RS1/16S182J
R 308		RS1/16S272J
R 309		RS1/16S682J
R 310		RS1/16S822J
R 311		RS1/16S103J
R 312		RS1/16S681J
R 313		RS1/16S103J
R 314		RS1/16S153J
R 315		RS1/16S153J
R 316		RS1/16S153J
R 317		RS1/16S103J
R 318		RS1/16S103J
R 319		RS1/16S102J
R 320		RS1/16S392J
R 322		RS1/16S103J
R 323		RS1/16S103J
R 324		RS1/16S103J
R 325		RS1/16S103J
R 501		RS1/16S0R0J
R 504		RS1/16S331J
R 508		RS1/16S472J
R 511		RS1/16S0R0J

Circuit Symbol and No.	Part Name	Part No.
R 512		RS1/16S333J
R 513		RS1/16S473J
R 516		RS1/16S331J
R 601		RS1/16S102J
R 602		RS1/16S102J
R 603		RS1/16S223J
R 604		RS1/16S223J
R 605		RS1/16S102J
R 606		RS1/16S681J
R 607		RS1/16S681J
R 608		RS1/16S102J
R 609		RAB4CQ681J
R 701		RAB4CQ104J
R 702		RS1/16S222J
R 703		RS1/16S681J
R 704		RAB4CQ222J
R 705		RAB4CQ681J
R 706		RS1/16S473J
R 707		RS1/16S473J
R 708		RS1/16S222J
R 709		RS1/16S222J
R 711		RAB4CQ104J
R 712		RS1/16S473J
R 713		RS1/16S681J
R 714		RS1/16S473J
R 715		RAB4CQ222J
R 716		RS1/16S103J
R 718		RS1/16S473J
R 719		RS1/16S104J
R 720		RS1/16S103J
R 724		RS1/16S104J
R 727		RS1/16S0R0J
R 734		RS1/16S104J
R 736		RS1/16S681J
R 739		RS1/16S473J
R 741		RS1/16S104J
R 742		RS1/16S222J
R 743		RS1/16S681J
R 758		RS1/16S153J
R 759		RS1/16S103J
R 760		RS1/16S433J
R 767		RS1/16S154J
R 775		RAB4CQ681J

CAPACITORS

Circuit Symbol and No.	Part Name	Part No.
C 101		CKSRYB103K25
C 102		CKSRYB104K25
C 103		CEVL101M10
C 104		CEVL470M6R3
C 105		CKSRYB224K16
C 106		CKSRYB224K16
C 107		CKSRYB224K16
C 201		CKSRYB104K25
C 202		CEVL220M16
C 203		CKSRYB473K25
C 204		CKSRYB182K50
C 205		CKSRYB104K25
C 206		CKSRYB152K50
C 207		CKSRYB224K16
C 208		CCSRCH180J50

Circuit Symbol and No.	Part Name	Part No.
C 209		CCSRCK2R0C50
C 210		CCSRCH181J50
C 211		CCSRCH510J50
C 212		CKSRYB682K50
C 213		CKSRYB104K25
C 214		CKSRYB104K25
C 215		CKSRYB103K25
C 216		CKSRYB104K25
C 217		CKSRYB104K25
C 218		CKSRYB104K25
C 219		CKSRYB104K25
C 220		CKSRYB104K25
C 221		CEVL470M6R3
C 222		CKSRYB104K25
C 223		CKSRYB102K50
C 224		CKSRYB104K25
C 225		CKSRYB103K25
C 301		CEVL101M10
C 302		CKSRYB224K16
C 303		CKSRYB224K16
C 304	10μF/10V	CCH1349
C 305		CKSRYB224K16
C 306	10μF/10V	CCH1349
C 307		CKSRYB224K16
C 309		CKSYB475K16
C 501		CKSRYB102K50
C 502		CKSRYB104K25
C 503		CKSRYB104K25
C 505		CKSRYB104K25
C 506		CKSRYB104K25
C 508		CKSRYB104K25
C 509		CKSRYB104K25
C 601		CEVL220M6R3
C 602		CEVL220M6R3
C 701		CKSRYB104K25
C 702		CKSRYB104K25
C 703		CKSRYB103K25
C 704		CKSRYB103K25
C 705		CKSRYB104K25
C 706		CKSRYB104K25
C 707		CKSRYB103K25
C 708		CKSRYB473K25

E

Unit Number:
Unit Name:PCB Unit(Load)

Q 21	Photo-transistor	CPT231SCTU
Q 22	Photo-transistor	CPT231SCTU
L 21	Inductor	LCYBR15J1608
L 22	Inductor	LCYBR15J1608
S 21	Spring Switch(LOAD1)	CSN1051
S 22	Spring Switch(LOAD2)	CSN1052

D

Unit Number:CWX2614

Circuit Symbol and No. Part Name Part No.

Unit Name:PCB Unit(LED)

D 31	Chip LED	CL205IRXTU
D 32	Chip LED	CL205IRXTU
S 31	Spring Switch(CAMLOAD)	CSN1052
S 32	Spring Switch(CAMEOK)	CSN1052
R 31		RS1/16S0R0J

G

Unit Number:CWX2611
Unit Name:PCB Unit

L 1	Inductor	CTF1389
S 41	Spring Switch(LOAD3)	CSN1051

F

Unit Number:CWX2613
Unit Name:PCB Unit(Side)

MISCELLANEOUS

S 11	Spring Switch(CAMCLMP)	CSN1052
VR11	Semi-fixed 1kΩ(B)	CCP1338

RESISTORS

R 11		RS1/16S562J
R 12		RS1/16S562J
R 13		RS1/10S391J
R 14		RS1/10S391J
R 15		RS1/16S0R0J
R 16		RS1/16S0R0J

CAPACITORS

C 12		CKSRYB104K25

H

Unit Number:
Unit Name:PCB Unit(M2 Unit)

MISCELLANEOUS

IC1	IC	BA6849FS
S 1	Switch(HOME)	CSN1057
S 2	Switch(CLAMP)	CSN1057

RESISTORS

R 1		RS1/16S221J
R 2		RS1/16S221J
R 3		RS1/16S4R7J
R 4		RS1/16S1R0J

CAPACITORS

C 1		CKSRYB104K16

Circuit Symbol and No. Part Name Part No.

I

Unit Number:EWM1043
Unit Name:Deck Unit

MISCELLANEOUS

Circuit Symbol and No.	Part Name	Part No.
IC251	IC	HA12216F
IC351	IC	PA2020A
Q 271	Transistor	2SC4116
D 352	Diode	1SS355
VR301	Semi-fixed 33kΩ(B)	CCP1280
VR302	Semi-fixed 33kΩ(B)	CCP1280

RESISTORS

Circuit Symbol and No.	Part Name	Part No.
R 255		RS1/16S181J
R 256		RS1/16S181J
R 257		RS1/16S183J
R 258		RS1/16S183J
R 259		RS1/16S133J
R 260		RS1/16S133J
R 261		RS1/16S274J
R 262		RS1/16S274J
R 271		RS1/16S183J
R 272		RS1/8S0R0J
R 273		RS1/8S0R0J
R 275		RS1/16S473J
R 276		RS1/16S104J
R 277		RS1/16S224J
R 278		RS1/16S104J
R 281		RS1/8S0R0J
R 282		RS1/8S0R0J
R 283		RS1/8S0R0J
R 284		RS1/8S0R0J
R 285		RS1/8S0R0J
R 286		RS1/8S0R0J
R 287		RS1/8S0R0J
R 288		RS1/8S0R0J
R 292		RS1/8S0R0J
R 296		RS1/16S0R0J
R 321		RS1/8S0R0J
R 351		RS1/16S102J
R 352		RS1/16S102J
R 353		RS1/16S102J
R 384		RS1/16S102J
R 355		RS1/16S274J
R 362		RS1/8S301J
R 373		RS1/16S0R0J
R 374		RS1/8S0R0J
R 375		RS1/16S0R0J
R 401		RS1/16S153J
R 402		RS1/16S332J
R 403		RS1/16S911J
R 404		RS1/16S274J

CAPACITORS

Circuit Symbol and No.	Part Name	Part No.
C 251		CKSRYB391K50
C 252		CKSRYB391K50
C 253		CKSRYB391K50
C 254		CKSRYB391K50

Circuit Symbol and No. Part Name Part No.

Circuit Symbol and No.	Part Name	Part No.
C 255		CKSRYB103K50
C 256		CKSRYB103K50
C 271		CEH1R0M50
C 272		CKSRYB104K16
C 301		CKSRYB104K16
C 302		CKSRYB104K16
C 309		CKSRYB104K16
C 310		CKSRYB104K16
C 351		CKSQYB224K25
C 352		CKSRYB392K50
C 353		CKSRYB103K50
C 354		CKSRYB103K50
C 355		CKSQYB104K50
C 356		CKSRYB103K50
C 401		CKSRYB392K50
C 402		CKSRYB334K10
C 403		CKSRYB223K25
C 404		CKSRYB103K50
C 405		CKSRYB333K16

J

Unit Number:EWM1041
Unit Name:Sensor Unit

MISCELLANEOUS

Circuit Symbol and No.	Part Name	Part No.
L 101	Inductor	CTF1546
L 102	Inductor	CTF1546
S 101	Switch(LOAD)	ESG1007
S 102	Switch(MODE)	ESG1007
S 103	Switch(70μS)	ESG1007
Q 101	Photo-reflector	EGN1004

Miscellaneous Parts List

Circuit Symbol and No.	Part Name	Part No.
M 1	Motor Unit(MAIN)	EXA1618
M 2	Motor Unit(SUB)	EXA1623
HD1	Head Assy	EXA1594
M 1	Motor Unit(-A)(CAMGEAR)	CXB7527
M 2	Motor Unit(-B)(ELEVATION)	CXB7526
M 3	Motor Unit(-A)(CRG)	CXB7517
VR1	Variable Resistor 10kΩ	CCW1023
	PU Unit(Service)(PX1)	CXX1569

● System 2

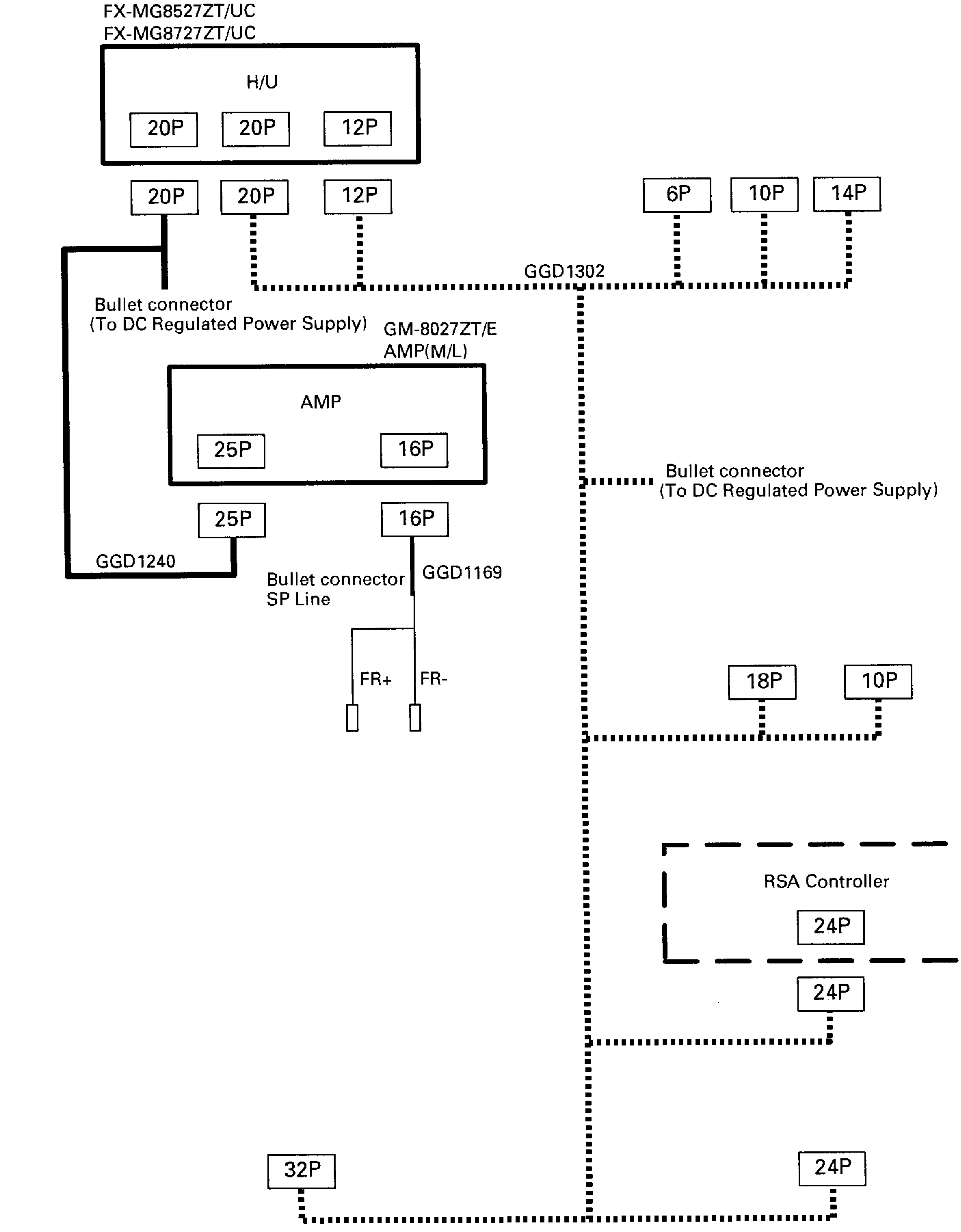
FX-MG8527ZT/UC
FX-MG8727ZT/UC
H/U
20P
20P
12P
20P
20P
12P
6P
10P
14P
GGD1302
Bullet connector
(To DC Regulated Power Supply)
GM-8027ZT/E
AMP(M/L)
AMP
25P
16P
25P
16P
Bullet connector
(To DC Regulated Power Supply)
GGD1240
Bullet connector
SP Line
GGD1169
FR+
FR-
18P
10P
RSA Controller
24P
24P
32P
24P

System 3

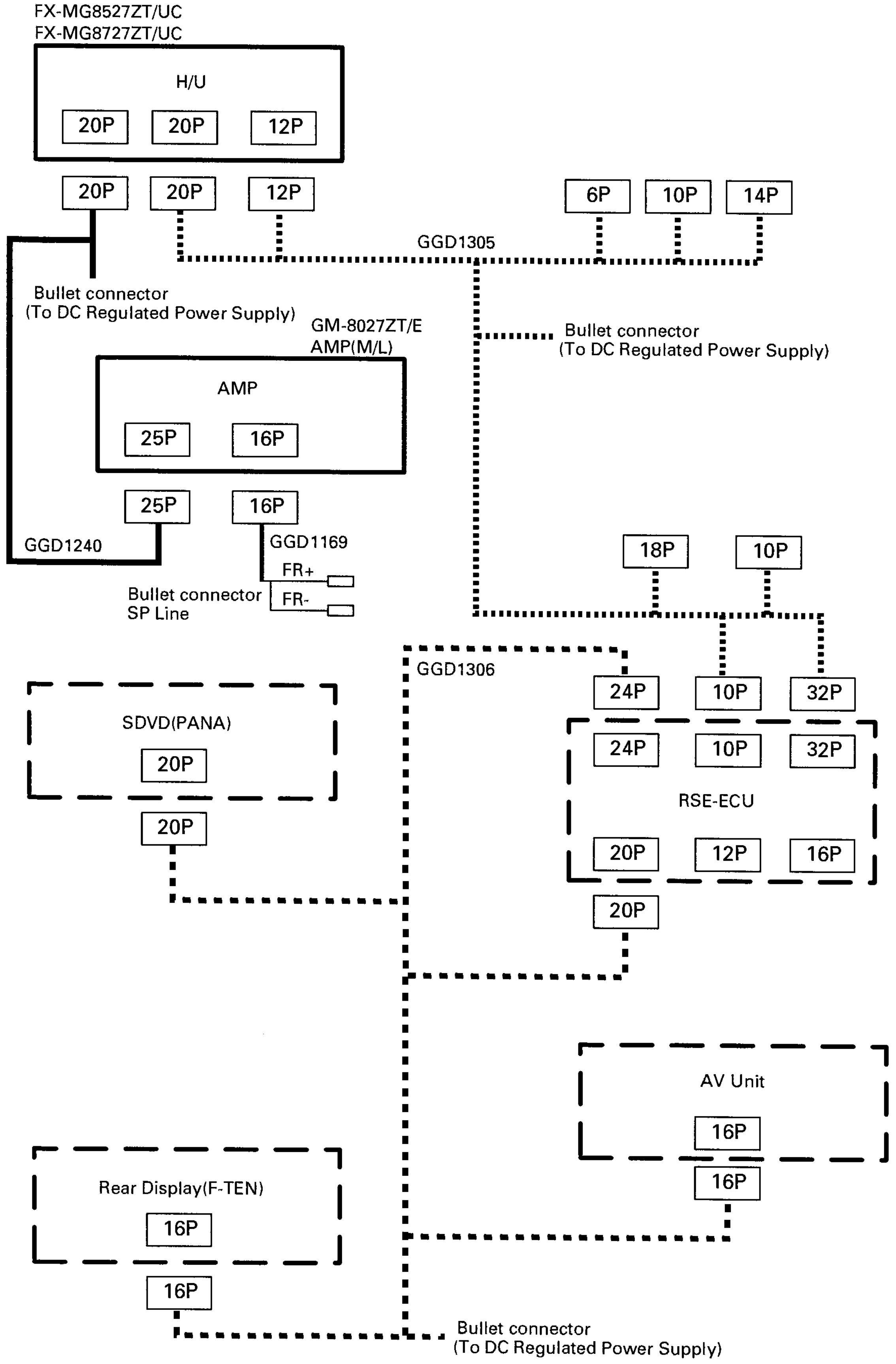

FX-MG8527ZT/UC
FX-MG8727ZT/UC
H/U
20P
20P
12P
20P
20P
12P
6P
10P
14P
GGD1305
Bullet connector
(To DC Regulated Power Supply)
GM-8027ZT/E
AMP(M/L)
Bullet connector
(To DC Regulated Power Supply)
AMP
25P
16P
25P
16P
GGD1240
GGD1169
FR+
FR-
Bullet connector
SP Line
18P
10P
GGD1306
24P
10P
32P
24P
10P
32P
RSE-ECU
20P
12P
16P
20P
SDVD(PANA)
20P
20P
AV Unit
16P
16P
Rear Display(F-TEN)
16P
16P
Bullet connector
(To DC Regulated Power Supply)

6.2 AUDIO, TUNER ADJUSTMENT

● **Connection Diagram**

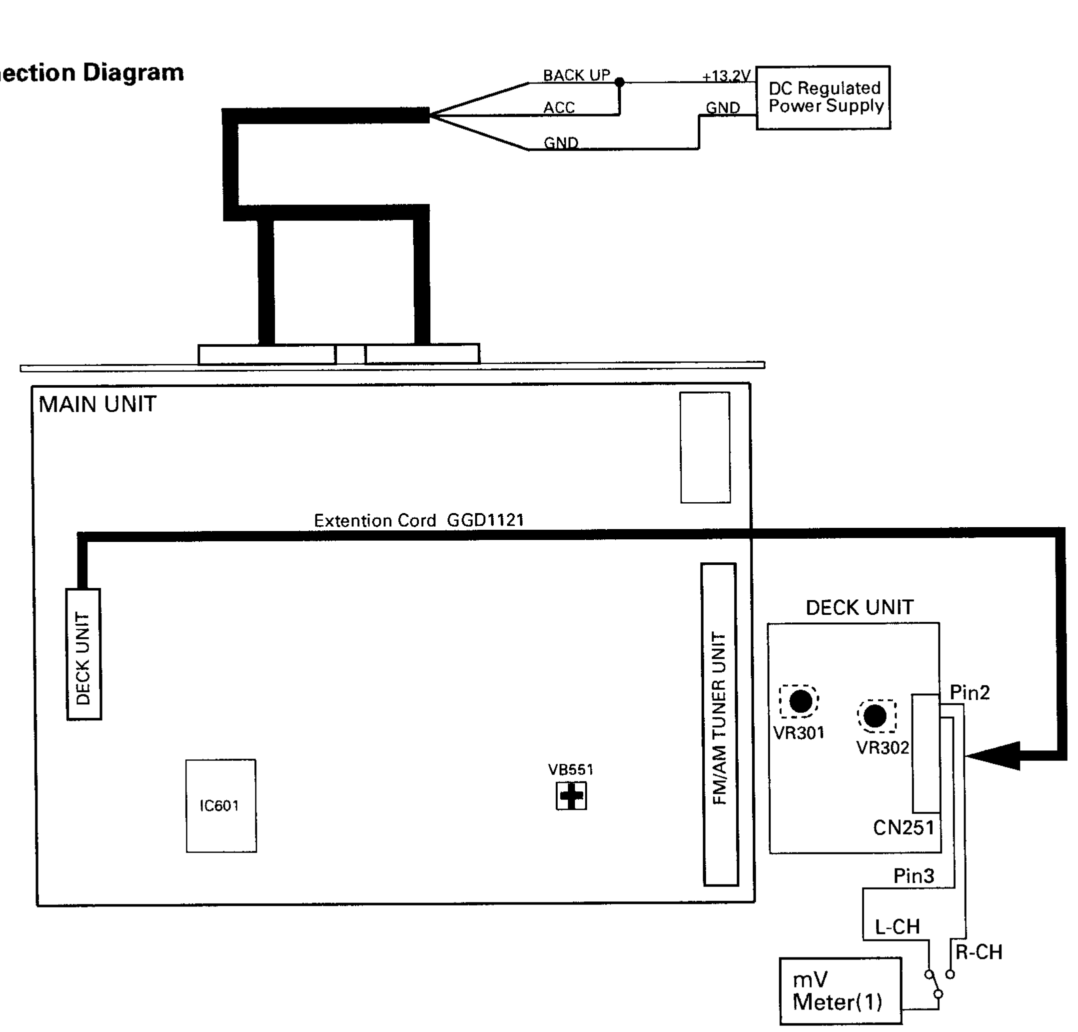

DOLBY B NR ADJUSTMENT

No.	Test Tape	Adjustment Point	Adjustment Method (Switch Position)
1	NCT-150 (400Hz,200nwb/m)	VR301(Lch),VR302(Rch)	mV Meter(1) : –8.24dBm(300mV)±1dB (DOLBY NR Switch : OFF)

AM NOISE CANCELER ADJUSTMENT

Connection:

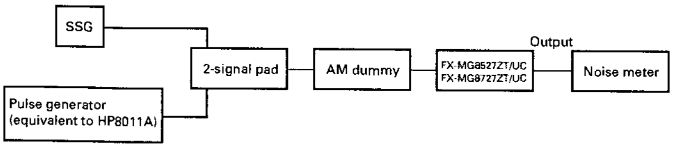

Setting of the pulse generator (setting of superimposed pulse)

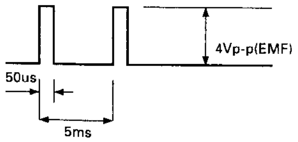

Pulse width :50usec

Pulse intervals :5mseo

Pulse voltage :4Vp-p

Adjustment:

1. Setting of SSG

   Receiving frequency : 1,000 kHz
   Percentage modulation : 30%
   Modulation frequency : 400 Hz
   Antenna input : 74 dBuV (EMF)

2. Tune a RADIO to the "1,000 kHz" with 1' condition.
3. .Mix signal with the above-mentioned pulse and SSG' moduration OFF.
4. Variable resistance adjust noise level to a minimam.

   Adjustment point : VR561

6.3 TEST MODE

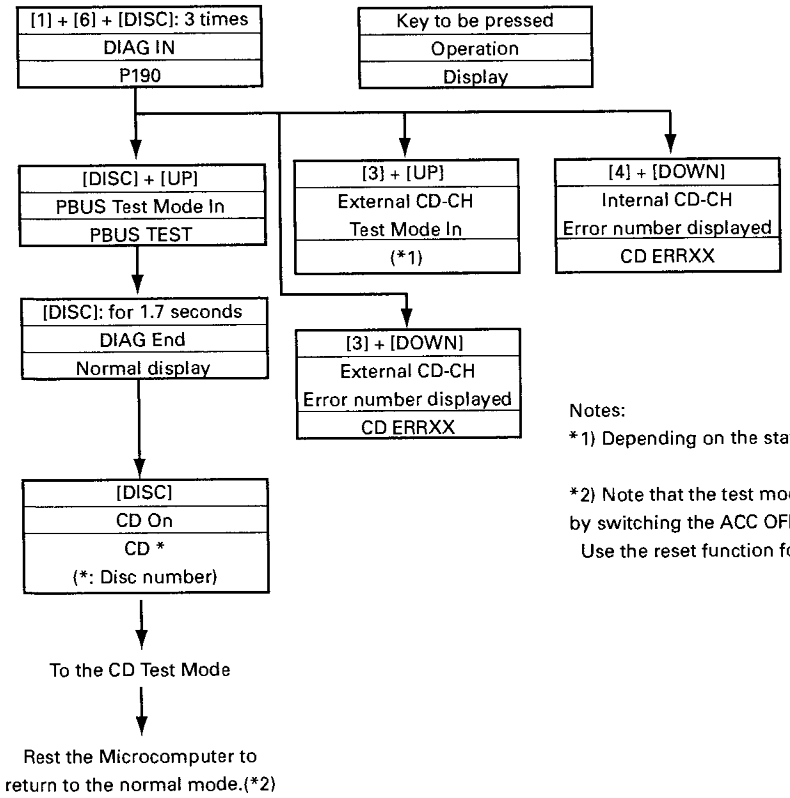

Notes:

*1) Depending on the state of DIAG

*2) Note that the test mode is cancelled in the system microcomputer by switching the ACC OFF and ON, but that it is not in the CD microcomputer. Use the reset function for complete cancellation of the test mode.

6.4 CD ADJUSTMENT

1) Precautions on Adjustment

- The unit employs a single voltage (+5V) for the regulator, thus the reference potential of the signal is REFO (approximately 2.5V) rather than GND.
  Inadvertent contact of REFO and GND during adjustment can result not only in disabling normal potential measurement but also in exposing the pickup to strong impacts due to malfunctioning of the servo. Therefore, you are requested to observe the following precautions.
- Make sure that the negative probe of the measuring instrument is not connected to REFO or GND. Special care must be exercised so that the channel 1 negative probe may not be connected to the oscilloscope and the channel 2 negative probe to GND. Since the frame of the measuring instrument is usually at the same potential as the negative probe, the frame of the measuring instrument must be changed to floating status.
  When REFO is inadvertently connected to GND, you must immediately turn off the regulator or power supply.
- The regulator must be turned off before mounting or dismounting filters or wiring materials.
- You should not start adjustment or measurement immediately after the regulator is turned on. It is recommended to run the player for approximately one minute so that it may stabilize.
- When the test mode is turned on, various protective functions from the software become unavailable. Thus, you must make sure that undesirable electric or mechanical shocks are not be given to the system.
- This model employs a photo-transistor for detecting discs at their loading or ejection. Thus, if its outer case is removed during repair work and internal parts are exposed to light of strong intensity, malfunctions including the following can result:
  * The eject button becomes inoperable during play. Pressing the eject button does not eject a disc and play is continued.
  * Loading becomes unavailable.

  If a malfunction is recognized, appropriate remedial actions must be taken. Such actions include changing the light source position, changing the unit position and applying a cover to the photo-transistor.
- When you press the EJECT key to eject a disc, you must not touch any other key until the ejection is complete.
- If you press the UP or DOWN for the focus search in the test mode, you must turn the power off immediately. (Otherwise, the lens will be forced to stick to the top or bottom, potentially resulting in the burning of the actuator.)

2) Description of the Test Mode

- Turning on the Test Mode
  See page 69.
- Ending the Test Mode
  Apply the reset (the reset will be applied two minutes after the power is turned from off).
- Operation of TR JUMPs (except 100TR) continues after your finger has left the key. CRG, MOVE and 100TR JUMP are forced to the tracking close mode as soon as the key is released.
- Turning the power on or off resets the JUMP MODE to the Single TR.

● Flow Chart

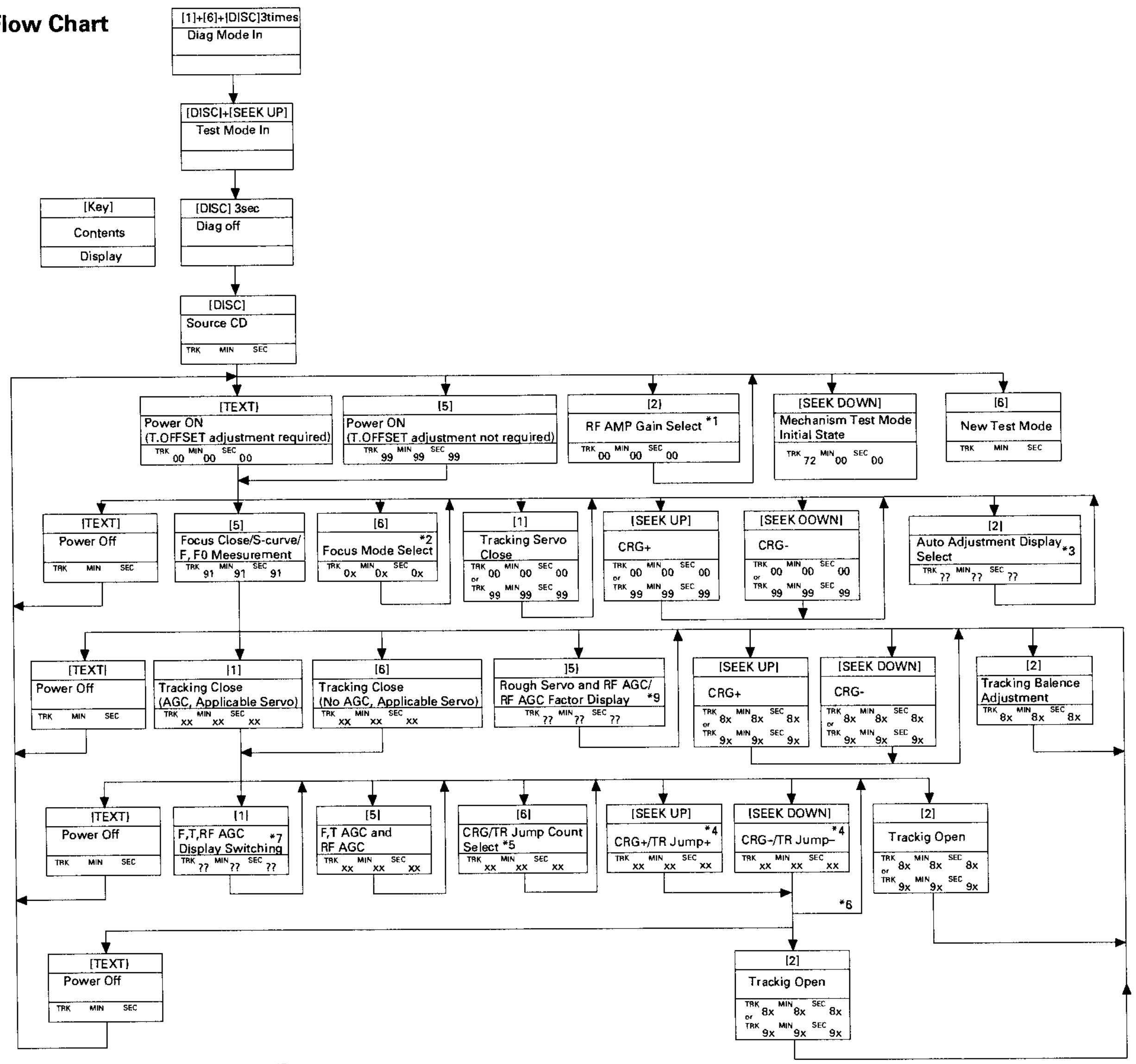

*1) TYP → -6dB → -12dB
TRK MIN SEC   TRK 06 MIN 06 SEC 06   TRK 12 MIN 12 SEC 12

*2) Focus Close → S.Curve Check → LD Off
TRK 00 MIN 00 SEC 00 (TRK 99 MIN 99 SEC 99)   TRK 01 MIN 01 SEC 01   TRK 02 MIN 02 SEC 02

*3) F.Offset Display → RF Offset Display → T.Bel Display → Rough Servo.

(F.Cancel value
= (Upper 8 bits of the setting (7F[H] to 80[H] + 128)/4
= 63[D] to 32[D] to 00[D]).

*4) Single TR /4TR / 10TR / 32TR / 100TR

*5) Single TR → 4 TR → 10 TR → 32 TR → 100 TR → CRG Move
9X(8X):91(81) 92(82) 93(83) 94(84) 95(85) 96(86)

*6) Only for the CRG Move and 100TR modes

*7) Track No. / Min / Sec → F.AGC Gain → T.AGC Gain → RF AGC Gain

(F.T. AGC Gain = (Current value/Initial value) x 20)

*8) CRG motor voltage : 2 [V]

*9)The first press displays the RF AGC coefficient. The second one or after performs the rough servo and RF AGC adjustments, and then displays the RF AGC coefficient.

- In all TR Jump modes exeept for 100TR, track jump operation continues even after the key is released.
  In the CRG Move and 100TR Jump modes, the tracking servo loop closes at the same time when the key is released.
- When the power is turned off and on, the jump mode, the RF AMP gain setting, and the auto adjustment values are reset to the Single TR (91),0dB, and the factory setting respectively.

Note: When you pressed the [SEEK UP] or [SEEK DOWN] key during the Focus Search, you must turn the power off immediately (otherwise, the lens can stick resulting in actuator damages).

[Key]	Operation: Test Mode	Operation: New Test Mode
[TEXT]	Power ON/OFF	Error occurrence time/ Cause display switching
[SEEK UP]	CRG+/TR Jump+ (Toward outer perimeter)	SEEK UP
[SEEK DOWN]	CRG-/TR Jump- (Toward inner perimeter)	SEEK DOWN
[1]	Tracking close and AGC and Applicable servo / AGC , AGC display switching	—
[2]	RF gain select / Offset adjustment display/ Tracking balance adjustment / Tracking open	—
[5]	Focus Close, S.Curve / Rough Servo/ RF AGC / F,T, RF AGC	—
[6]	Focus mode select / Tracking close / CRG·TR jump select	—
[LOAD]	DISC load	DISC load
[EJECT]	DISC eject	DISC eject
[4] (DISC UP)	DISC UP	DISC UP
[3] (DISC DOWN)	DISC DOWN	DISC DOWN

6.5 CHECKING THE GRATING AFTER CHANGING THE PICKUP UNIT

• Note :
The grating angle of the PU unit cannot be adjusted after the PU unit is changed. The PU unit in the CD mechanism module is adjusted on the production line to match the CD mechanism module and is thus the best adjusted PU unit for the CD mechanism module. Changing the PU unit is thus best considered as a last resort. However, if the PU unit must be changed, the grating should be checked using the procedure below.

• Purpose :
To check that the grating is within an acceptable range when the PU unit is changed.

• Symptoms of Mal-adjustment :
If the grating is off by a large amount symptoms such as being unable to close tracking, being unable to perform track search operations, or taking a long time for track searching.

• Method :

• Measuring Equipment	• Oscilloscope, Two L.P.F.
• Measuring Points	• E, F, REFO
• Disc	• ABEX TCD-784
• Mode	• TEST MODE

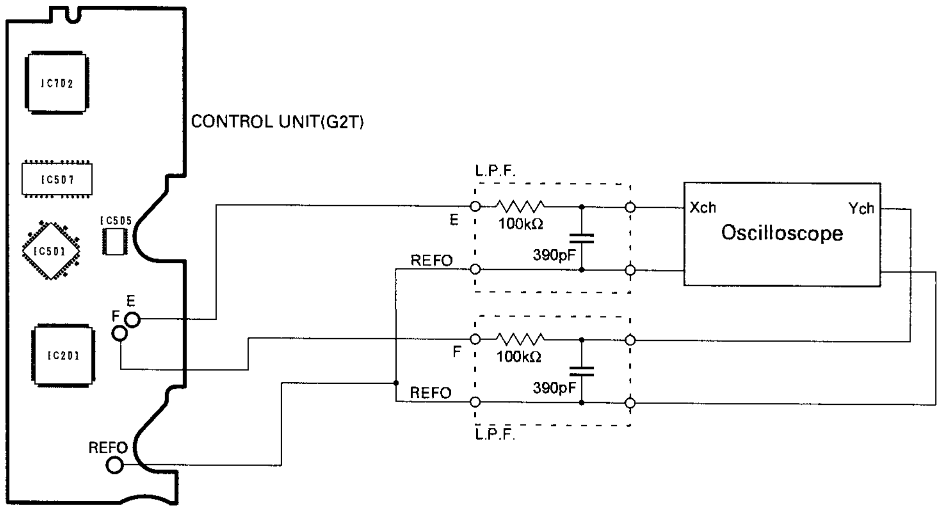

• Checking Procedure
1. In test mode, load the disc and switch the 5V regulator on.
2. Using the **SEEK UP** and **SEEK DOWN** buttons, move the PU unit to the innermost track.
3. Press key 5 to close focus, the display should read "91". Press key **2** to implement the tracking balance adjustment the display should now read "81". Press key 5 4 times. The display will change, returning to "81" on the fourth press.
4. As shown in the diagram above, monitor the LPF outputs using the oscilloscope and check that the phase difference is within 75° . Refer to the photographs supplied to determine the phase angle.
5. If the phase difference is determined to be greater than 75° try changing the PU unit to see if there is any improvement. If, after trying this a number of times, the grating angle does not become less than 75° then the mechanism should be judged to be at fault.

• Note
Because of eccentricity in the disc and a slight misalignment of the clamping center the grating waveform may be seen to "wobble" (the phase difference changes as the disc rotates). The angle specified above indicates the average angle.

• Hint
Reloading the disc changes the clamp position and may decrease the "wobble".

Grating waveform

Ech → Xch 20mV/div, AC
Fch → Ych 20mV/div, AC

0°

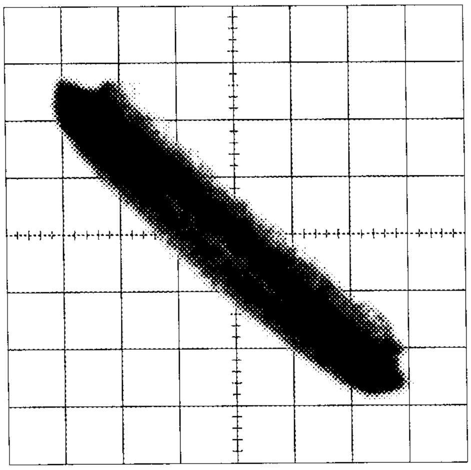

30°

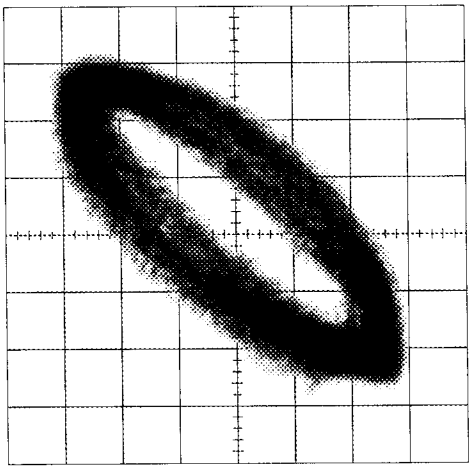

45°

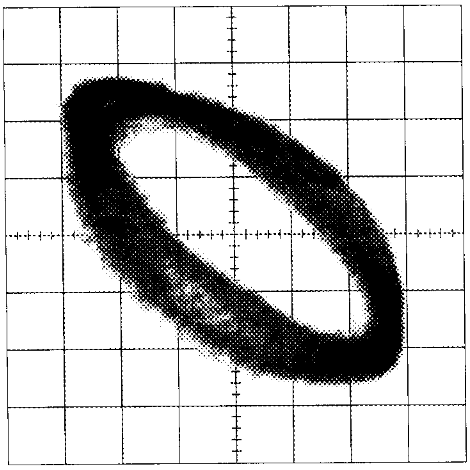

60°

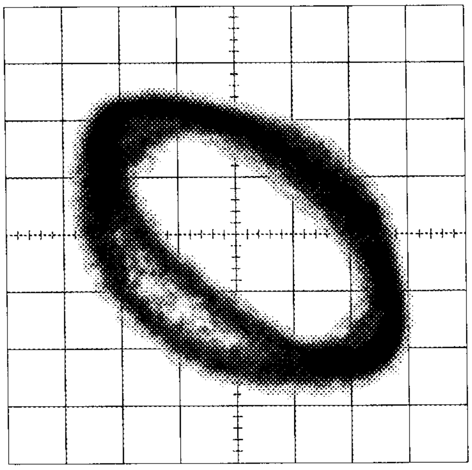

75°

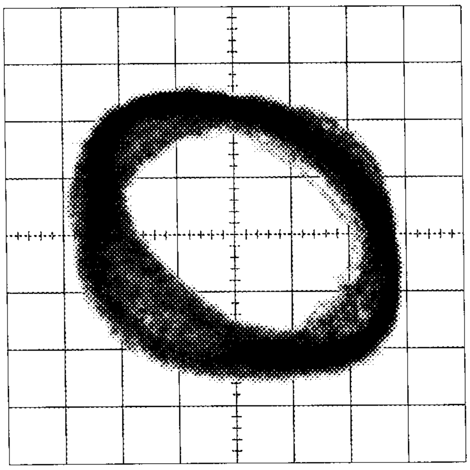

90°

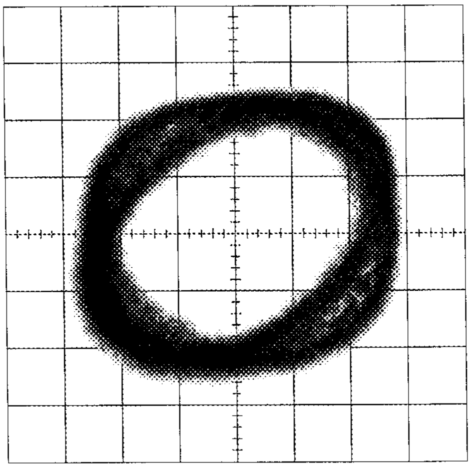

6.6 TEST MODE(CD)

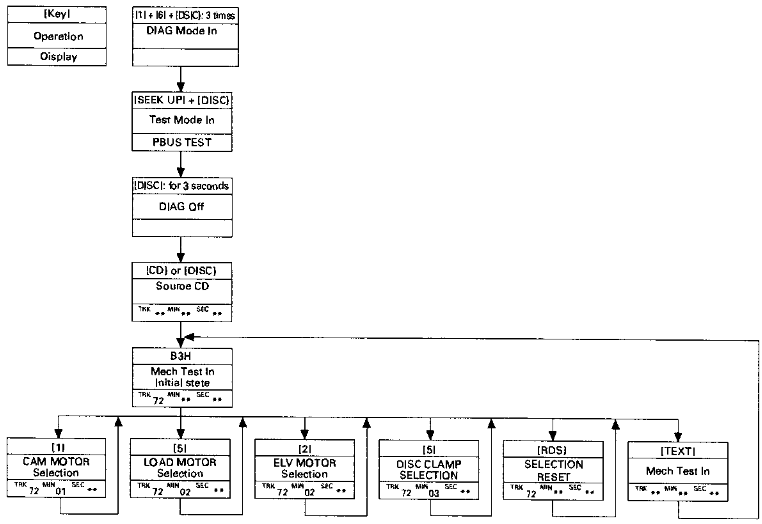

Manual test

Select the motor you desire to move by using one of the following four keys: [1] , [2] , [5] , and [6] .
After selecting the motor, use the [SEEK UP] or [SEEK DOWN] key tomove the selected motor. While the key is being pressed, the motor will keep moving.

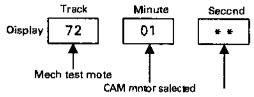

1. To select the CAM motor, press the [1] key.
For the CAM PLAY direction, use the [SEEK UP] key.
For the CAM ELV direction, use the [SEEK DOWN] key.

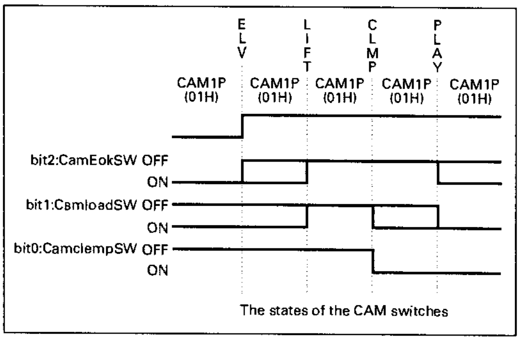

Key	Operation
[TEXT]	To the mech test initial state
[SEEK UP]	Moves the motor selected by one of the keys B3H to B6H, in the FWD direction. The motor keeps moving while the key is pressed.
[SEEK DOWN]	Moves the motor selected by one of the keys B3H to B6H, in the REV direction. The motor keeps moving while the key is pressed.
[1]	Selects the CAM motor.
[2]	Selects the ELV motor.
[5]	Selects the LOAD motor.
[6]	Selects the DISC CLAMP.
[TYPE]	Selection reset.

2. To select the ELV motor, press the [2] key.
For the ELV UP direction, use the [SEEK UP] key.
For the ELV DOWN direction, use the [SEEK DOWN] key.

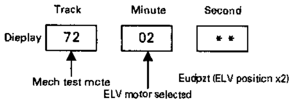

3. To select the LOAD motor, press the [5] key. (Default)
For loading, use the [SEEK UP] key.
For ejection, use the [SEEK DOWN] key.

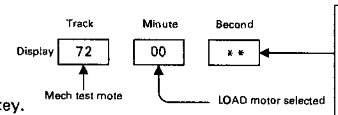

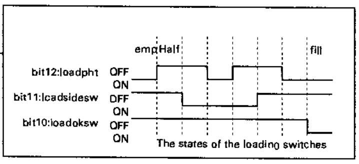

4. To select the SPDL claws, press the [6] key.
Caution: SPDL claw test should be performed in the servo test mode. The SPDL claws are controlled by the servo systems and the switches conditions cannot be checked in the mechanical test mode.

To open the claws, use the [SEEK UP] key.
To close the claws, use the [SEEK DOWN] key.

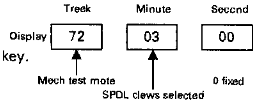

Durability test

To enter the durability test modes, press the [TYPE] key.
To exit from the test modes, press one of the keys [1], [2], [5], and [6].

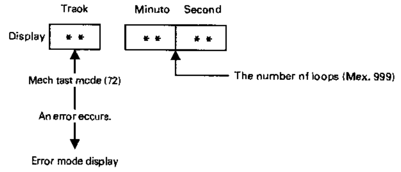

1. LOAD durability test (Load <-> Eject)
At the door open position (disc insertion/eject position), insert a disc and press the [TYPE] key.

2. CAM durability test (Play <-> ELVOK)
At any position between CAM4P and CAM5P (display: 06, 04), press the [TYPE] key.

3. LIFT durability test (Current disc <-> Door Open)
At any position between CAM2P and CAM3P (display: 06, 07), press the [TYPE] key.

4. ELV durability test (ELV1F <-> 6F)
At the CAM1P position (display: 01), press the [TYPE] key.

● Electrical and servo errors

Mode	Digit	Code	Name	Descriptions	AVC-LAN error code
Electrical error	1,2	A0	VD power NG	VD power abnormal	ERROR 4
	1,2	A1	Mech Vref NG	Mech elevation reference voltage abnormal	ERROR 4
	3,4			At the occurrence of error, motor control output (*6)	
Servo error	1,2	10	Carriage home NG	The CRG cannot move to inner tracks or move from inner tracks.	ERROR 3
	1,2	11	Focus search NG	No focus	ERROR 1
	1,2	12	Spindle Lock NG Subcode	No spindle lock. Sub codes cannot be read.	ERROR 1
	1,2	14	Mirror NG	Not applicable to the G2 mech.	
	1,2	17	Setup NG	AGC protection does not function. Focus is easily unlocked.	ERROR 1
	1,2	19	Tracking Balance NG	Not applicable	
	1,2	30	Search time-out	Cannot reach the target address.	ERROR 1
	3			At the occurrence of error, claw switch value	
	4			The rotation rate does not satisfy the spec.	

● Mechanical errors

Mode	Digit	Code	Name	Descriptions	AVC-LAN error code
Waiting for disc pulled out	1,2	20		CAMRST→Forced ejection→Waiting for disc pulled out	ERROR 3
	1,2	21		WTLOAD→Forced ejection→Waiting for disc pulled out	ERROR 3
	1,2	22		EJCTON→Forced ejection→Waiting for disc pulled out	ERROR 3
	1,2	23		SEJPCK→Forced ejection→Waiting for disc pulled out	ERROR 3
	1,2	24		HLFLOAD→Forced ejection→Waiting for disc pulled out	ERROR 3
	1,2	25		DINSRDY→Forced ejection→Waiting for disc pulled out	ERROR 3
	1,2	26		LIFTDN→LIFTUP→Forced ejection→Waiting for disc pulled out	ERROR 3
	3			The m2stat value at the original error followed by forced ejection (*3)	
	4			The LOAD SW value (3 bits) at the forced ejection end:	
CAM Err	1,2	51	MFWDTO	CAM motor FWD time-out error during TRAY UP operation	ERROR 3
	1,2	52	MREVTO	CAM motor REV time-out error during TRAY UP operation	ERROR 3
	1,2	5a	MFWDTO	CAM motor FWD time-out error during TRAY DN operation	ERROR 3
	1,2	5b	MREVTO	CAM motor REV time-out error during TRAY DN operation	ERROR 3
	1,2	5e	MFWD2TO	CAM motor FWD2 time-out error during TRAY DN operation	ERROR 3
	1,2	61	MFWDTO	CAM motor FWD time-out error during CRG OUT operation	ERROR 3
	1,2	62	MREVTO	CAM motor REV time-out error during CRG OUT operation	ERROR 3
	1,2	64	MLSWNG	LOAD SW ON stuck error during CRG OUT operation	ERROR 3
	1,2	66	MREV2TO	CAM motor REV2 time-out error during CRG OUT operation	ERROR 3
	1,2	6a	MFWDTO	CAM motor FWD time-out error during CRG IN operation	ERROR 3
	1,2	6b	MREVTO	CAM motor REV time-out error during CRG IN operation	ERROR 3
	1,2	71	MFWDTO	CAM motor FWD time-out error during ELV IN operation	ERROR 3
	1,2	72	MREVTO	CAM motor REV time-out error during ELV IN operation	ERROR 3
	1,2	7a	MFWDTO	CAM motor FWD time-out error during ELV OUT operation	ERROR 3
	1,2	7b	MREVTO	CAM motor REV time-out error during ELV OUT operation	ERROR 3
	1,2	7d	MLSWNG	LOAD SW ON stuck error during ELV OUT operation	ERROR 3
	1,2	7f	MREV2TO	CAM motor REV2 time-out error during ELV OUT operation	ERROR 3
	1,2	81	MFWDTO	CAM motor FWD time-out error during EIN_EXP operation	ERROR 3
	1,2	82	MREVTO	CAM motor REV time-out error during EIN_EXP operation	ERROR 3
	1,2	8a	MFWDTO	CAM motor FWD time-out error during CIN_EXP operation	ERROR 3
	1,2	8b	MREVTO	CAM motor REV time-out error during CIN_EXP operation	ERROR 3
	1,2	aa	MOVERCNT	CAM SW has nct been determined during CAM eperation (Chatter remains.)	ERROR 3
	3			The OK stop position at the last elevation operation (*4)	
	4			The CAM SW value (3 bits) before retry (with the first error)	
CAMRST Err	1,2	91	MFWDTO	ELV motor FWD time-out error during CAMRST operation	ERROR 3
	1,2	92	MREVTO	ELV motor REV time-out error during CAMRST operation	ERROR 3
	1,2	93	MOVERCNT	Over-count error during CAMRST operation	ERROR 3
	1,2	94	MSPDERR	The claws do not close during CAMRST operation.	ERROR 3

Mode	Digit	Code	Name	Descriptions	AVC-LAN error code
	1,2	96	MREV2TO	Overrun error during CAMRST operation	ERROR 3
	3			The CAM SW value (3 bits) before operation	
	4			The ELV stop position before operation (*5)	
Claw Err	1,2	9a	MSPDERR	The claws do not close during DSKFREE operation.	ERROR 3
	1,2	9b	MSPDERR	The claws do not open during DSKLOCK operation.	ERROR 3
	1,2	9c	MSPDERR	The claws do not close during CLWCLSE operation.	ERROR 3
	1,2	9d	MSPDERR	The claws do not open during CLWOPEN operation.	ERROR 3
	3			The CAM SW value (3 bits) with the claw error	
	4			The CLAW SW values before and after the error stop (2 bits each)	
DISCSEL Err	1,2	b1	MFWDTO	ELV motor FWD time-out error during DISCSEL operation	ERROR 3
	1,2	b2	MREVTO	ELV motor REV time-out error during DISCSEL operation	ERROR 3
	1,2	b3	MODERCNT	Over-count error during DISCSEL operation	ERROR 3
	1,2	b6	MREV2TO	Overrun error during DISCSEL DISC operation	ERROR 3
	3			The target disc No.	
	4			The ELV error stop position before retry (*5)	
LIFT Err (*2)	1,2	c1	MFWDTO	ELV motor FWD time-out error during LIFT UP operation	ERROR 3
	1,2	c2	MREVTO	ELV motor REV time-out error during LIFT UP operation	ERROR 3
	1,2	c3	MODERCNT	Over-count error during LIFT UP operation	ERROR 3
	1,2	c6	MREV2TO	Overrun error during LIFT UP operation	ERROR 3
	1,2	d1	MFWDTO	ELV motor FWD time-out error during LIFT DN operation	ERROR 3
	1,2	d2	MREVTO	ELV motor REV time-out error during LIFT DN operation	ERROR 3
	1,2	d3	MOVERCNT	Over-count error during LIFT DN operation	ERROR 3
	1,2	d4	MLSWNG	DISC IN (SIDE SW ON) is sensed during door close operation.	ERROR 3
	1,2	d6	MREV2TO	Overrun error during LIFT DN operation	ERROR 3
	1,2	d7	MLSW2NG	"Pinched disc" is sensed during LIFT DN operation (within the range of +/-1LSB, 200ms continued)	ERROR 3
	3			Current disc No.	
	4			The ELV error stop position before retry (*5)	
error ERROR 3	1,2	90	BACKUP_NG	CAMRST→Forced ejection→Door open/close error	ERROR 3
	1,2	eb	MLSWNG	LOAD SW error during HLFLOAD operation	ERROR 3
	1,2	ed	MLSWNG	LOAD SW error during SEJPCK operation	ERROR 3
	1,2	fb	MLSWNG	LOAD SW error during DINSRDY operation	ERROR 3
	1,2	e0	BACKUP_NG	Backup NG during EJCTON operation	ERROR 3
	1,2	e2	MREVTO	MREVTO error during EJCTON operation	ERROR 3
	1,2	e5	MREV2TO	MREV2TO error during EJCTON operation	ERROR 3
	1,2	f0	BACKUP_NG	Backup NG during WTLOAD operation	ERROR 3
	1,2	f1	MFWDTO	MFWDTO time-out error during WTLOAD operation	ERROR 3
	1,2	f2	MREVTO	SIDE SW ON with OK SW ON waiting retry during WTLOAD operation	ERROR 3
	1,2	f3	MCHTERR	Incomplete insertion error during WTLOAD operation	ERROR 3
	1,2	f4	MLSWNG	OK SW ON but PHOTO ON during WTLOAD operation	ERROR 3
	1,2	f5	MFWD2TO	MFWD2TO time-out error during WTLOAD operation	ERROR 3
	1,2	f6	MREV2TO	OK SW ON waiting retry (3 times) during WTLOAD operation	ERROR 3
	1,2	f7	MLSW2NG	SIDE SW ON at the OK SW ON waiting mode during WTLOAD operation	ERROR 3
	1,2	ab	MOVERCNT	The LOAD SW hes not been determined during insertion/loading operation (Chatter remains.)	ERROR 3
	3			The LOAD SW value (3 bits) at the FEJCHK end	
	4			The ELV stop position at the FEJCHK end (*5)	
New test mode	1,2	40	New test mode	Focus NG after servo close	ERROR 1
	1,2	41	New test mode	Lock NG after servo close	ERROR 1
	1,2	42	New test mode	Sub code NG after servo close	ERROR 1
	1,2	43	New test mode	Not applicable to the G2 mechanism.	ERROR 1
	3			The claw SW value at the occurrence of error	
	4			The rotation rate does not satisfy the spec.	

Notes:
*1) Insertion/ejection error is output only when door open/close error occurs with forced eject.

*2) LIFT error is output under the following conditions:
LIFTDN --> TLFTUP --> forced eject --> door open/close error

*3) The values of m2stat:
B.upNg=0, FwdTo=1, RevTo=2, Chata=3, OverCnt=4, SwNg=5, SpdNg=6,
Fwd2To=7, Rev2To=8, Sw2Ng=9

*4) The last results of chatter check (compared with the target center):
+8LSB=1, +7LSB=2, +6LSB=3, +5LSB=4, +4LSB=5, +3LSB=6, +2LSB=7,
+1/0LSB=8, -1/0LSB=8,-2LSB=9, -3LSB=a, -4LSB=b, -5LSB=c, -6LSB=d, -7LSB=e, -8LSB=f,
the others=0

*5) Basically the value of eudpzt except for the following case:
In case of eudpzt=1 and door close mode, eudpzt=e

*6) bit0: P_lo1, bit1: P_lo2, bit2: P_elv1, bit3: P_elv2, bit4: P_cg1, bit5: P_cg2,
bit6: P_elv_vol, bit7: P_lod_vol

6.7 AVC-LAN DIAGNOSIS MODE

●Oporations and functions

Normal operation mode

(1) Key operations for Diagnosis IN (Note *1) →
← (2) Key operations for Diagnosis OUT

All-element lighting mode SW check mode

All elements on the LCD are lit. (This is for checking if the LCD is lit normally.)
Note : In this mode, when any key except for TRACK UP is pressed, a beep will be heard once. (You can check if pressing keys are accepted normally by hearing beeps.)

↓ (3) Key oparations for entering Service check mode

← (2) Key operations for Diagnosis OUT

Service check mode

The physical addresses for all devices connected to the AVC-LAN (including this product) are displayed. The current and past product conditions are checked by performing the system check and collecting the diagnosis memory data. Each address check result is displayed as follows: "OK", "Not connected", "Check", "Replace", "Old Version" or "No response".

(6)Key operations for Memory clearance →
← Memory clearance automatically ends.

(5)Key operations for returning to the service check mode ↑
↓ (4)Key operations for entering the details display mode

← (2) Key operations for Diagnosis OUT

Details display mode

This mode is available only when thc service check result is "Check", "Replace" or "Old Version". For each physical address, the following information is displayed:
- Logical address for the device where some failure occurs and the diagnosis codes (indicating details of the failure), which were obtained through system check
- In addition to the above data, sub-code (indicating the device with failure), connecting confirmation no. (time stamp), and frequency of occurrence, which were obtained from diagnosis memory data

(6)Key operaticns for Memory clearance →

Diagnosis memory clearance

< From the service check mode >
The diagnosis memory data (codes) for all devices connected are cleared.
< From the details display mode >
The diagnosis memory data for devices selected is cleared.
After memory clearance is completed, the mode is automatically shifted to the service check mode.

Note *1: To enter the diagnosis IN mode, use the buttons on the head unit.

●Key operations

(1) Diagnosis IN With three times of beep sound, the mode change operation completes.	While pressing the CH1 and CH6 buttons simultaneously, press the DISC button three times.
(2) Diagnosis OUT	Keep the DISC button pressed for 1.7 seconds or more and turn the ACC switch OFF.
(3) Entering the Service check mode. With a beep sound, the mede change completes.	Press the TRACK UP button.
(4) Entering the Details display mode.	Press the CH2 button.
(6) Returning to the service check mode.	Press the CH3 button.
(6)Clearing the Memory data	Keep the CH5 button pressed for 1.7 seconds or more.
Change the display (forward)	Press the TRACK UP button.
Change the display (backward)	Press the TRACK DOWN button.

●Diagnosis mode display

Service check mode

After system check completes, the check results for the devices connected to the AVC-LAN are displayed in turn in order of physical address number as follows:

◆ "Physical address"
...The smallest physical address number is displayed first, whose check result will follow it.

Ex. P190
- Physical address number (radio cassette)
- The physical address is displayed.

◆ "Check result"
...The check result is displayed.

Ex.		
good	Normal (OK)	
ECHn	Replace	→ Details display mcde
CHEC	Check	→ Details display mcde
OLd	Old Version	→ Details display mcde

◆ "Physical address"
...The next physical address number is displayed.

◆ "Connecting confirmation no. (current)"
...The AVC-LAN time stamp is displayed.

Ex. no01
- The connecting confirmation number is displayed.
- The current connecting confirmation number (expressed in the hexadecimal number system by using 00 to FF)

The number increases by one each time one minute passes. When 256 minutes pass, the indication returns to 00.

Details display mode (only in case of "Replace", "Check", or "Old Version")

This mode is available only when the service check result is "Replace", "Check" or "Old Version".
To select this mode, press the CH2 key.

◆ "Physical address (for selected devices)"
The physical address number is displayed, whose check result details will follow it.

Ex. _ P360
- Physical address number (CD-CH)

◆ "Diagnosis data source"
The detailed items depend on the data source.

Ex. SyS The data was obtained from system check.

◆ "Logical address"
The logical address number for the device with failure is displayed.

Ex. 1L_63
- Logical address number (CD-CH)
- The logical address is displayed.
- Serial number

◆ "Diagnosis code"
The diagnosis code indicates what prcblem occurs.

Ex. 1d_45
- Diagnosis code (abnormal EJECT)
- The diagnosis code is displayed.

Ex. COdE The data was obtained from diagnosis memory data.

◆ "Logical address"...The same as that for the SyS data
◆ "Diagnosis code"...The same as that for the SyS data
◆ "Sub code"...This code indicates the device with failure.

Ex. 1P_190
- The sub code is displayed.

◆ "Connecting confirmation number (when some failure occurs)"... AVC-LAN time stamp

Ex. no01
- The connecting confirmation number (expressed in the hexadecimal number system by using 00 to FF)
- The connecting confirmation number is displayed.

◆ "Frequency of occurrence"
...The frequency of failures occurred

Ex. 1c_15
- The frequency of occurrence expressed in the decimal number system.
- The frequency of occurrence is displayed.

If there are two or more diagnosis codes, the diagnosis data display will continue.

Physical address allocation

② →, ③ ↓

① 1	0	1	2	3	4	5	6	7	8	9	A	B	C	D	E	F
0	M.DISP computer	New EMV	New devioe with AV	New MM ECU	devioe with AV				Audio ECU	Audio H/U		Rear TV	Reer Control SW	Multi-CD decoder	CD-CH oommander	AMP eontrolled redio tuner
2													Europe GW ECU			
4												1-DIN Navigation	Consolidated inside panel	Simple LCD	Consolidated SW	
6													Gatewey ECU			
8			New 1-DIN TV		Europe navigation DISP.M/U		Rear TV with movie mode	Navigation with controls				DISPLAY with SW	FM multiplex DISPLAY	Fr controlled SW	MD-CH commander	
C								MONET ECU					Steering SW	Navigation remoto controller	Body computer	
E								Vehicle Information ECU								
1,3,5,7, 9-B,D,F																

Display P①②③
Ex.P190 Physical address

① 2	0	1	2	3	4	5	6	7	8	9	A	B	C	D	E	F
0	Navigation computer	ATIS	VICS	TV tuner	H/W CD-CH	H/W DVD-CH	TEL information ECU		Camera controller							
8						DVD deck										
1-7, 9-F																

① 3	0	1	2	3	4	5	6	7	8	9	A	B	C	D	E	F
0	Radio		Cassette	Radio cassette with no CH oontroller	CD-P		1DIN CD-CH		MD-P		MD-CH		DAT		DCC	
8																TEL ECU
1-7, 9-F																

① 4	0	1	2	3	4	5	6	7	8	9	A	B	C	D	E	F
0	Equalizer				DSP				H/W AMP							
1-F																

① 5	0	1	2	3	4	5	6	7	8	9	A	B	C	D	E	F
0	GPS receiver	ATIS decoder	FM multiplex decoder		CD-CH		MD-CH		CD-ROM -CH		MD-ROM -CH		TEL information			
8			Radio wave beacon										May Day			
C			Optical beacon													
1-7,9-8,D-F																

① 6	0	1	2	3	4	5	6	7	8	9	A	B	C	D	E	F
0	A/C computer								Body computer							
1-F																

Diagnosis code table

Logical address name	Logical address	Diagnosis code	Diagnosis details
Communi -cation control	01H	00	No diagnosis
		01	Abnormal reset
		10	Abnormal +B
		11	Abnormal ACC
		12	Abnormal MUTE
		13	Fuse broken
		20	Microcomputer - abnormal
		21	ROM - abnormal
		22	RAM - abnormal
		23	Bus - abnormal
		24	F-ROM - abnormal
		25	V-RAM - abnormal
		26	Gate allay abnormal
		27	Paint controller abnormal
		28	Backup memory abnormal
		29	Voice output controller abnormal
		2A	Internal power supply abnormal
		30	Sync signal abnormal (input)
		31	Sync signal abnormal (output)
		D0	ECU not connected
		D1	Transmission abnormal
		D2	Connecting confirmation: abnormal
		D4	Connecting confirmation: no response
		D5	Registered device data missing (History of registered devices)
		D6	Master unavailable
		D7	Connecting confirmation: abnormal
		D8	Connecting confirmation: no response
		D9	Last mode abnormal
		DA	Command/order: no response
		DB	Mode status abnormal
		DC	Transmission fault
		DD	Master reset
		DE	Slave reset
		DF	Master abnormal
		E0	Registration completion acknowledgement error
		E1	Voice processor ON abnormal
		E2	ON/OFF command or parameter abnormal
		E3	Registration command transmission
		E4	Multiple frames intermit.
		FF	Diagnosis - no response
Radio	50H	10	AM tunar PLL unlocked
		11	FM tuner PLL unlocked
		40	No antenna connected
		41	Antenna power supply abnormal
		42	Tuner power supply abnormal
		43	AM tuner abnormal
		44	FM tuner abnormal
		45	SW tuner abnormal
TV tuner	40H	10	TV tuner PLL unlocked
		11	FRONTEND abnormal
		40	TV divergence shifting error
		41	TV – no reception
		42	VNR screen error
		43	No antenna connected
		44	Antenna power supply abnormal
		45	SEL +B current – small
		46	SEL +B current – large
Cassette tape	61H	10	Belt broken
		40	Mechanical failure cr cassette broken
		41	EJECT failure
		42	TAPE jamming
		43	Dirty head
		44	Mech power supply abnormal
CD	43H	10	CD Mech abnormal
CD-P	62H	11	CD loading/unloading abnormal
CD-CH	63H	12	CD lead-in abnormal
		40	No disc loaded
		41	Incorrect disc
		42	Disc unreadable
		43	CD-ROM abnormal
		44	CD abnormal
		45	EJECT abnormal
		46	Scratches or non-recorded side
		47	CD high temperature detected
		48	Excessive current detected
		50	Tray IN/OUT abnormal
		51	Elevator abnormal
		52	Clamp abnormal
MD	64H	10	MD mech abnormal
MD-CH	65H	11	MD IN/OUT abnormal
		12	MD lead-in abnormal
		40	No disc loaded
		41	Incorrect disc
		42	Disc unreadable
		43	MD-ROM abnormal
		44	MD abnormal
		45	EJECT error
		46	Scratches or non-recorded side
		47	MD high temperature detected
		48	Excessive current detected
		50	Tray IN/OUT abnormal
		51	Elevator abnormal
		52	Clamp abnormal
Navigation /GPS	58H	10	Gyroscope abnormal
	80H	11	GPS receivar abnormal
		12	RTC abnormal
		13	SS section abnormal
		14	No Time updating
		15	TCXO abnormal
		16	PLL lock abnormal
		40	GPS antanna abnormal
		41	GPS antenna power supply abnormal
		42	Map disc reading abnormal
		43	SPD signal abnormal
		44	Player abnormal
		45	High temperature abnormal
FM multiplex (VICS), radio wave beacon, beaccn, cptical beaccn, FM multiplex (data), and FM multiplex tuner	54H	41	Antenna power supply abnormal
	84H	45	Radic wave beacen - no antenna connected
	5BH	46	Optical beacon - no antenna connected
	83H	47	No FM antenna connected
	82H	4A	FM receiver abnormal
	9AH	4B	Radio wave beacon abnormal
		4C	Optical beacon abnormal
Voice control	85H	40	Voice-control activation SW abnormal
		41	Voice-control Microphona abnormal
Extended communi -cation	02H	40	Multi-CD-CH (optical cable) abnormal
		41	Multi-CD-CH (optical cable) not connected
		42	Multi-CD-CH (CarNet) abnormal
		43	Multi-CD-CH (CarNet) not connected
		50	HIT64 communication not connected
		51	HIT64 communication abnormal
		52	HIT64 BRQ disconnection
		53	HIT64 BRQ short-circuit
		54	HIT64 disconnection
		55	CarNet communication not connected
		56	CarNet communication abnormal
		57	CarNet periodical communication abnormal
Information display/front monitors	32H	10	Video circuit abnormal
	34H	11	Back light abnormal (with no current)
		12	Back light abnormal (with excessive current)
		13	Panel open/close mechanical operation abnormal
		40	Front seat monitor abnormal
		41	Heater abnormal
SW, Audio SW, SW shifting, Command SW	21H	10	Panel SW abnormal
	23H	11	Touch SW failure
	24H		
	25H		
TEL ECU, TEL	57H	10	TEL ECU abnormal
	68H	40	Communication serial lines abnormal
		41	Wireless PWR lines abnormal

7. GENERAL INFORMATION

7.1 DIAGNOSIS

7.1.1 DISASSEMBLY

● Removing the Grille Assy (Fig.1)

1 Remove the three screws.

Disconnect the connector and then remove the Grille Assy.

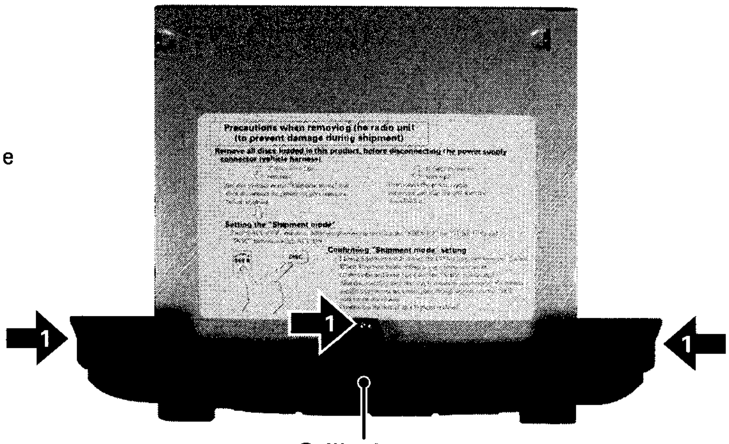

Fig.1

● Removing the Frame (Fig.2)

1 Remove the five screws and then remove the Frame.

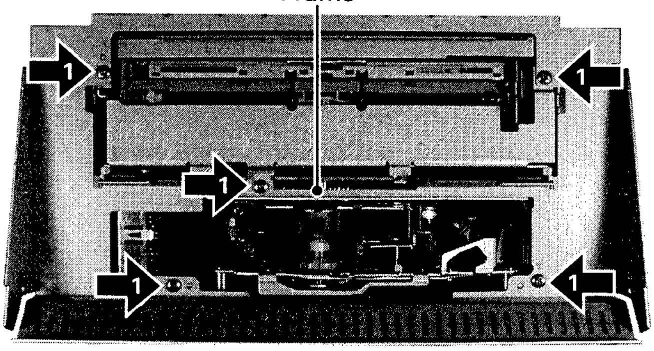

Fig.2

● Removing Chassis (Fig.3)

1 Remove the eight screws.

Disconnect the connector and then remove the Chassis.

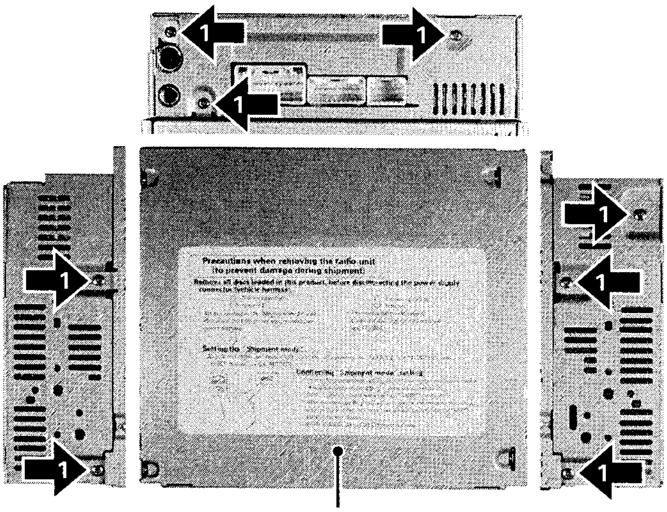

Fig.3

● Removing the Cassette Mechanism Module (Fig.4)

1 Remove the four screws and then remove the Cassette Mechanism Module.

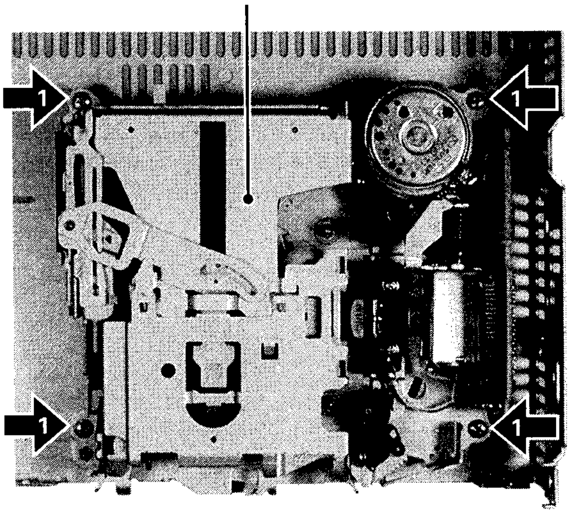

Fig.4

● Removing the Main Unit (Fig.5)

1 Straight the tabs at three locations indicated.

2 Remove the two screws and then remove the Main Unit.

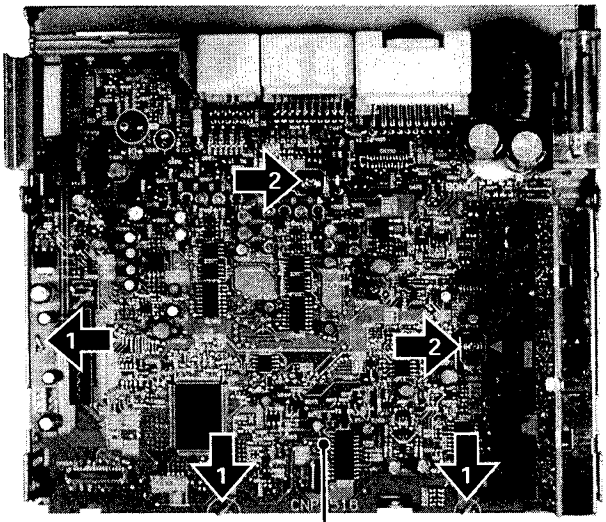

Fig.5

● **Removing the Control Unit(G2T) (Fig.6)**

1. Remove the eight screws and then remove the Case.
2. Apply shorting solder to the PU flexible cable before disconnecting it from the connector.
3. Disconnect the connector.
4. Remove the two screws B.
5. Remove the Control Unit(G2T).

● **Removing the CD Mechanism Unit (Fig.6)**

1. Remove the two springs A and two springs B.
2. Remove the three screws A and then remove the Bracket Unit.
3. Remove the four Dampers and then remove the CD Mechanism Unit.

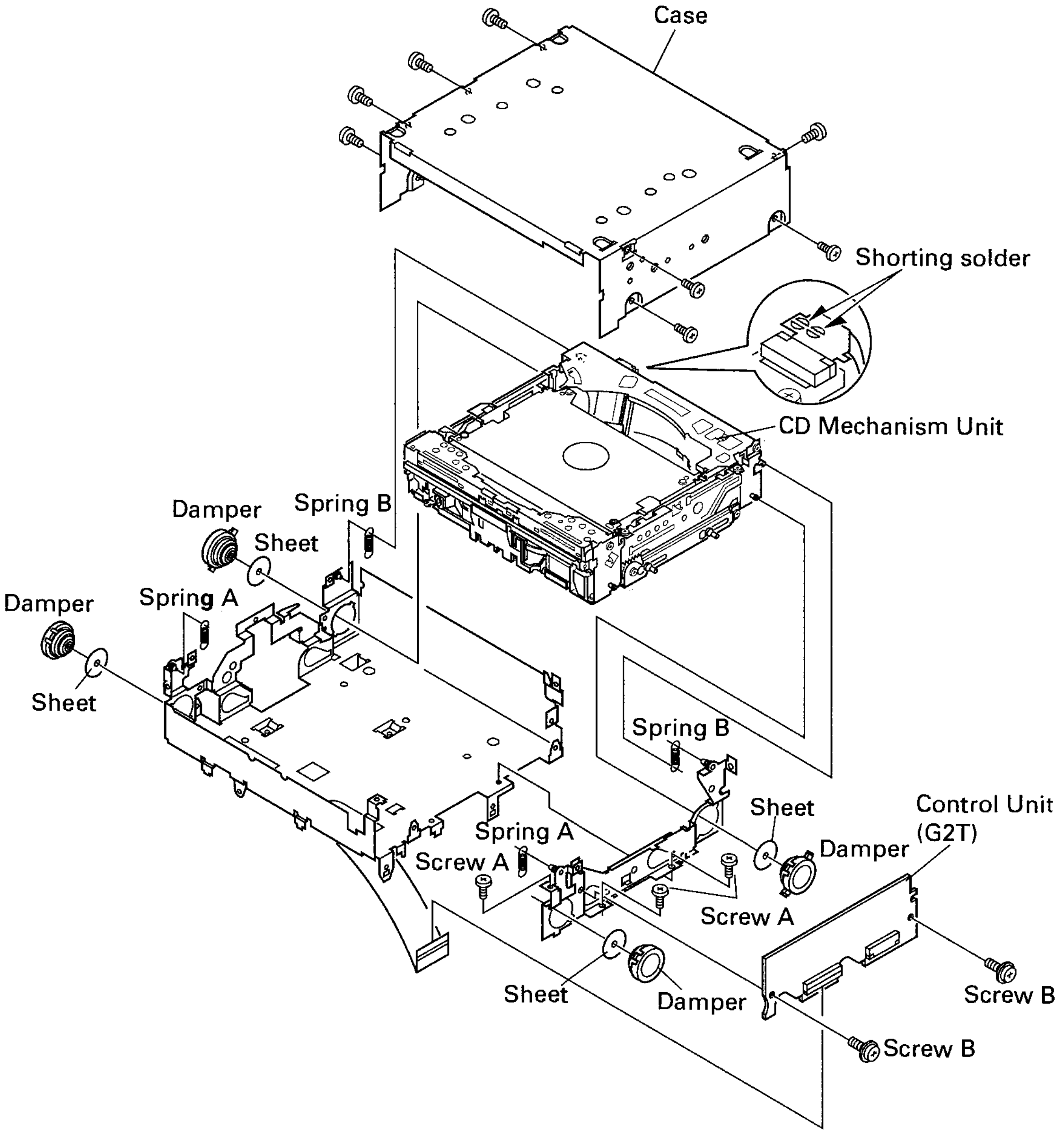

Fig.8

● Cautions on replacing the CD mechanism unit

The CD mechanism units available as service parts have been set in the shipment mode at the factory. Before mounting it on the product to be serviced, be sure to apply the power to a CD mechanism to put it into the initial mode, where the carriage mech assy stays at the disc clamp position, in accordance with the following method:

<Initial mode setting method>

1. Keep a CD mechanism unit out of the product to be serviced as shown below. Connect the 50-pin connector of the control unit (G2T) in the product and the 50-pin connector of the PCB unit (Side) in the CD mechanism by using the extension cable (GGD1250).
2. Apply the power (+14V) to the product to move the CD mechanism until it enters the initial mode and stops. (Operating time: about 30 seconds)
3. When it is confirmed that the CD mechanism stops in the initial mode, the setting completes.

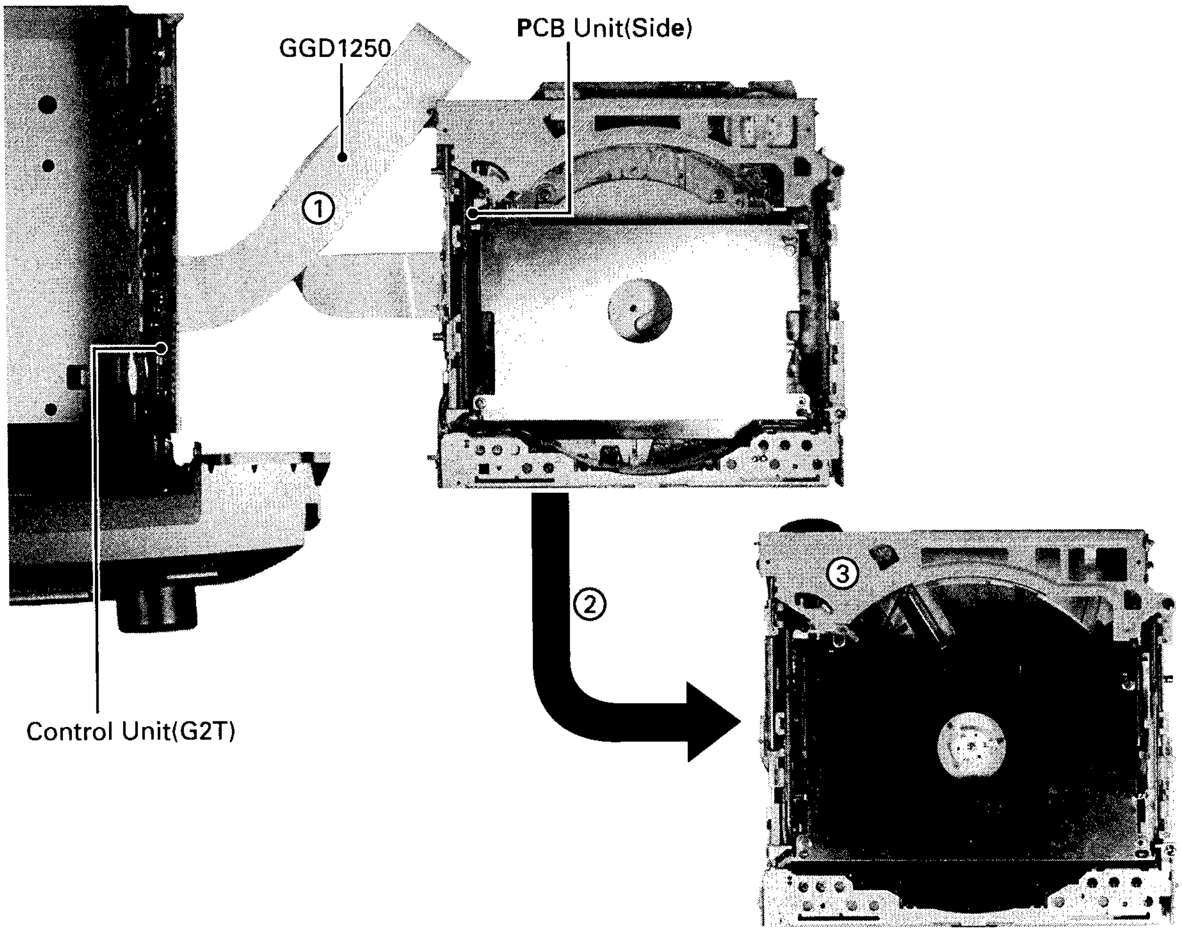

● Removing the PU Unit(PX1)

1. Set the mechanism to the shipment mode.
2. Remove the two screws A and two screws B.
3. Remove the Frame.

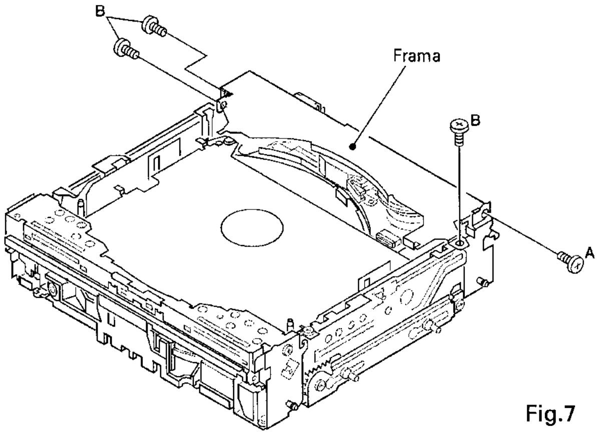

Fig.7

4. Apply shorting solder to the PU flexible cable before disconnecting it from the connector CN12.
5. Disconnect the flexible cable from the connector CN12, and remove the flexible cable Holder.
6. Remove the washer and Arm. (Be careful not to lose the spring B.)
7. Remove the screw, spring A, and Collar.
8. Remove the Carriage Mech. Assy.

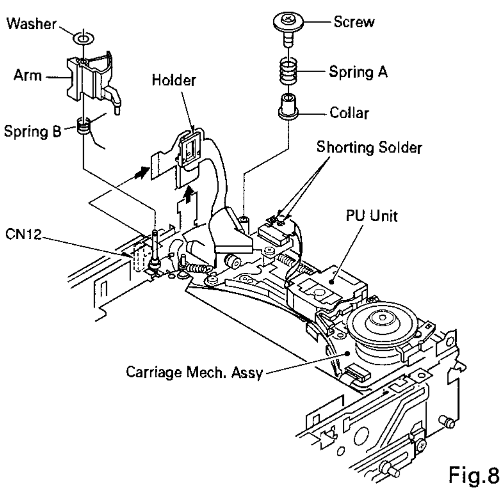

Fig.8

9. Apply shorting solder to the PU flexible cable before disconnecting it from the Connector.
10. Disconnect the PU flexible cable from the Connector.
11. Move the PU Unit to the left side slightly by turning the Gear.
12. Pull out the spindle motor Support Wheel Unit upwards to remove it.
13. Remove the Spring.
14. Slide the holder to make it easier to remove the Screw Unit.

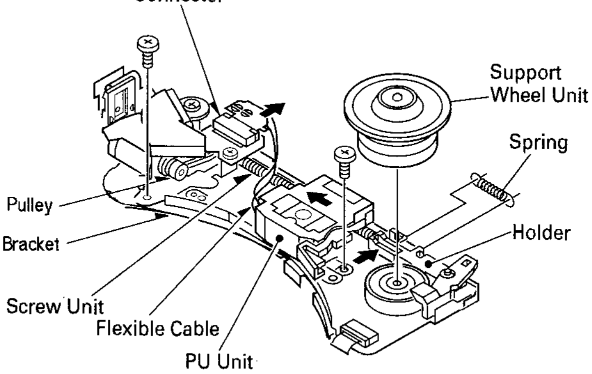

Fig.9

15. While pressing the shaft holder in the direction shown by the black arrow in the right figure, remove the PU Unit together with the Screw Unit.

Note:
To assemble the PU Unit, insert the Spring on the PU rear between the PU Unit and the Guide first.

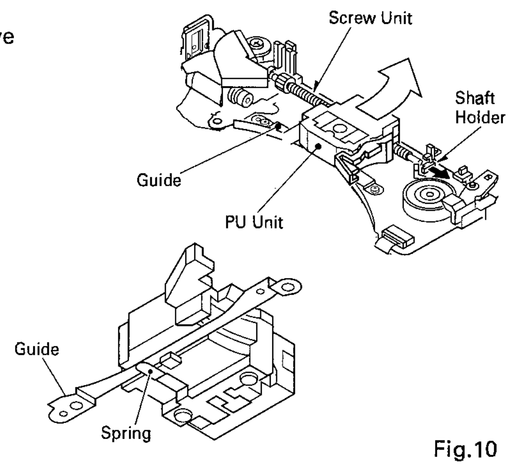

Fig.10

7.1.2 PCB LOCATIONS

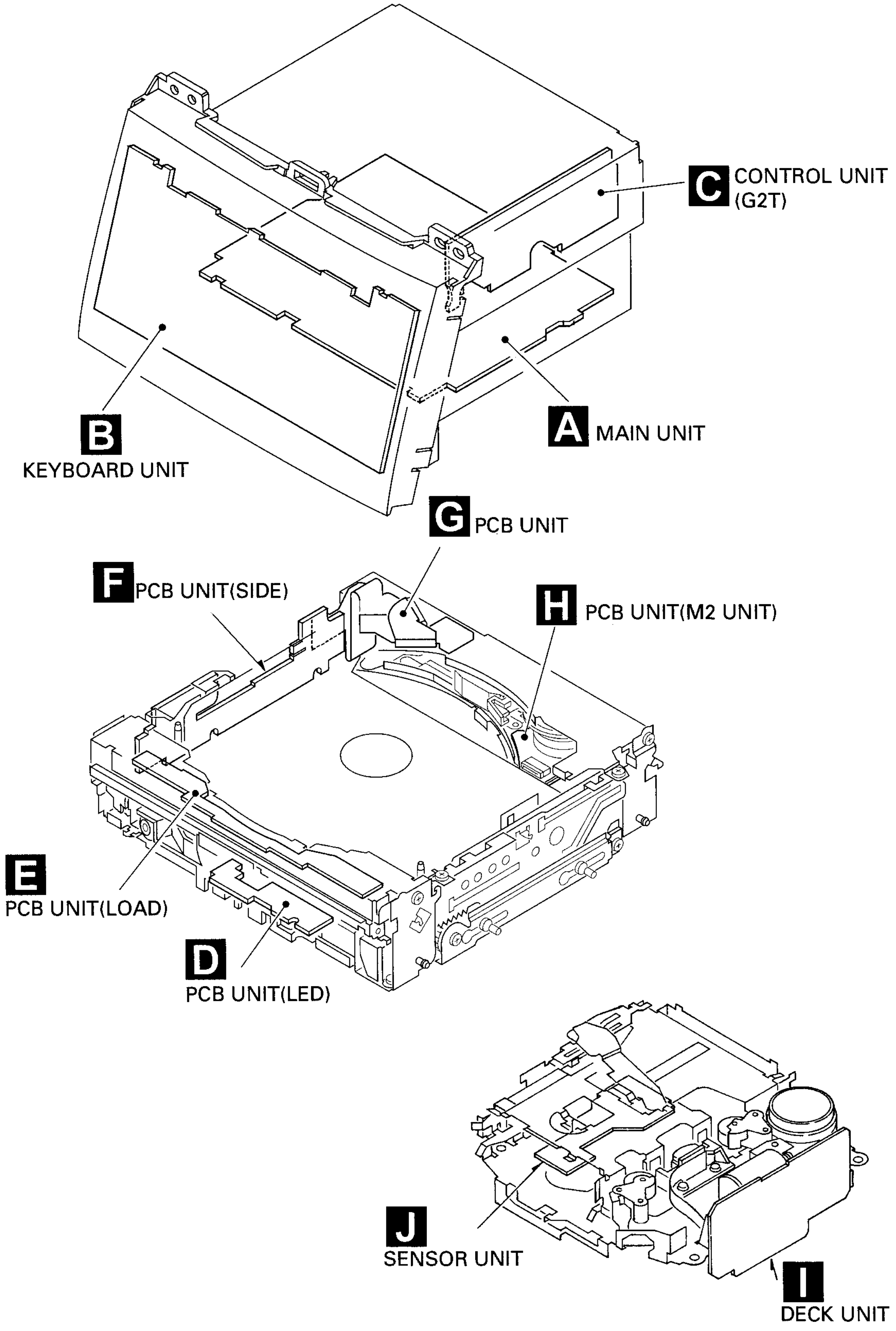

7.1.3 CONNECTOR FUNCTION DESCRIPTION

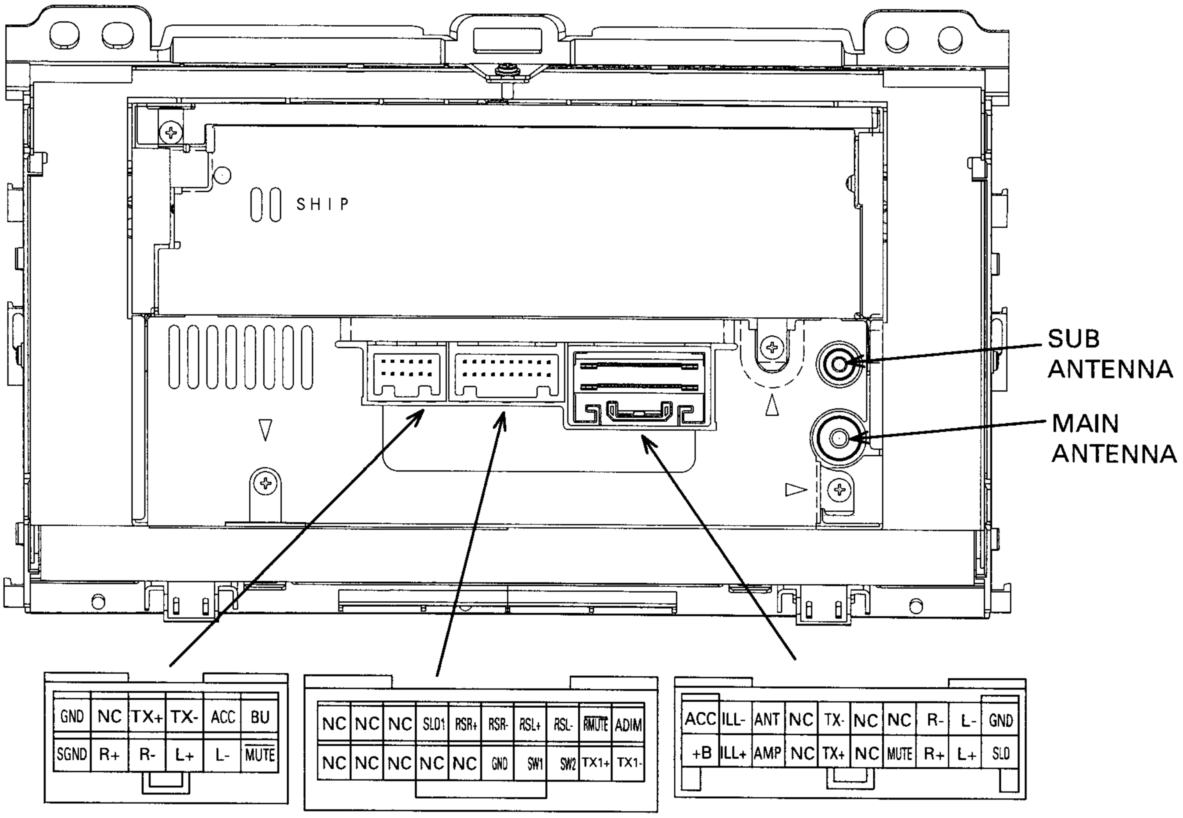

7.2 PARTS
7.2.1 IC

● **Pin Functions (PD5732A)**

Pin No.	Pin Name	I/O	Function and Operation
1	FMSD	I	Tuner : FM SD input
2	ST	I	Tuner : FM stereo indicator input
3	BLIGHT	O	Back Light ON/OFF output
4	LAMP	O	Lamp power supply control output
5	LDO	O	LCD driver : Data output
6	LDI	I	LCD driver : Data input
7	LCK	O	LCD driver : Clock output
8	BYTE	I	Connect to ground
9	CNVSS	I	Ground
10	LOCL	O	Tuner : Local L output
11	PCE2	O	Tuner : EEPROM chip enable output
12	$\overline{\text{RESET}}$	I	Reset Input
13	XOUT	O	Crystal oscillating element connection terminal
14	VSS		GND
15	XIN	I	Crystal oscillating element connection terminal
16	VDD		Power supply terminal
17	$\overline{\text{NMI}}$	I	Connect to VDD
18	$\overline{\text{RCK}}$	I	RDS : Clock input
19	NC		Not used
20	$\overline{\text{CDEJ}}$	I	CD EJECT key sense input
21	RX2	I	IP-BUS : Data input
22	IPPW	O	IP-BUS : Driver power supply output
23	NC		Not used
24	NC		Not used
25	NC		Not used
26	NC		Not used
27	DRST	O	RDS : Decoder reset output
28	NC		Not used
29	RX1	I	IP-BUS : Data input
30	TX	O	IP-BUS : Data output
31	PDO	O	Tuner : PLL IC data output
32	PDI	I	Tuner : PLL IC data input
33	$\overline{\text{PCK}}$	O	Tuner : PLL IC clock output
34	PCE1	O	Tuner : PLL IC chip select output
35	BSO	O	P–BUS : Serial data output
36	BSI	I	P–BUS : Serial data input
37	BSCK	O	P-BUS : Serial clock output
38	$\overline{\text{BRXEN}}$	I/O	P-BUS : Reception enable input/output
39	$\overline{\text{BRST}}$	O	P-BUS : Reset output
40	$\overline{\text{BSRQ}}$	O	P-BUS : Service request output
41	FMPW	O	FM power supply control output
42	AMPW	O	AM power supply control output
43	SYSPWR	O	System power control output
44	RDT	I	RDS : Data input
45	SEL1b	O	Amp output select b output
46	SEL1a	O	Amp output select a output
47	INH1	O	Amp output inhibit output (Not used)
48	SEL2b	O	RSE output select b output
49	SEL2a	O	RSE output select a output
50	INH2	O	RSE output inhibit output (Not used)
51	RSEMUTE	O	RSE mute output
52	$\overline{\text{SYSMUTE2}}$	O	System mute output
53	$\overline{\text{SYSMUTE}}$	O	RSE system mute output
54	ANTA	O	Antenna control output 0 (Not used)
55	SWVDD	O	Keyboard unit power supply control output
56	LANMUTE	I	AVC-LAN mute output
57	ADIM	I	ADIM information input

Pin No.	Pin Name	I/O	Function and Operation
58	ROMDT	I/O	ROM correction data input/output (Not used)
59	ROMCLK	O	ROM correction clock output (Not used)
60	TEST	I	Test mode input
61	ROMCS	O	ROM correction chip select output (Not used)
62	VCC		Power supply terminal
63	ANTB	O	Antenna control 1 output (Not used)
64	VSS		Ground
65	ISEN	I	Illumination power supply sense input
66	MS	I	Cassette mechanism : Music search sense input
67	FR	O	Cassette mechanism : Head forward/reverse select output
68	PLAY	O	Cassette mechanism : MS gain select output
69	MTL	I	Cassette mechanism : 70µs equalizer select input
70	NR	O	Cassette mechanism : Dolby NR ON/OFF select output
71	CSLOAD	I	Cassette mechanism : Tape loading sense input
72	POS	I	Cassette mechanism : Position sense input
73	ASENS	I	ACC power supply sense input
74	CSEJ	I	Tape eject sense input
75	BSENS	I	Back up power supply sense input
76	ES	I	Tape end sense input
77	SC2	O	Cassette mechanism : Sub motor control 2 output
78	SC1	O	Cassette mechanism : Sub motor control 1 output
79	CM	O	Cassette mechanism : Capstan motor control output
80	STBY	O	Cassette mechanism : Driver stand-by output
81	POWER	I	POWER key input
82	ENC1+	I	VOL encoder (+) input
83	ENC1-	I	VOL encoder (-) input
84	ENC2+	I	AUD encoder (+) input
85	ENC2-	I	AUD encoder (-) input
86	LCE1	O	LCD driver 1 chip enable output
87	NC		Not used
88	NC		Not used
89	LOFF	O	LCD driver OFF output
90	RDSLK	I	RDS : LK signal input
91	NC		Not used
92	NC	I	Not used
93	SL	I	Tuner : Signal level input
94	ILL-	I	Rheostat signal input
95	STSW2	I	Steering switch 1 input
96	AVSS		A/D converter ground terminal
97	STSW1	I	Steering switch 1 input
98	VREF		A/D converter reference voltage terminal
99	AVCC		A/D converter power supply terminal
100	NC		Not used

* PD5732A

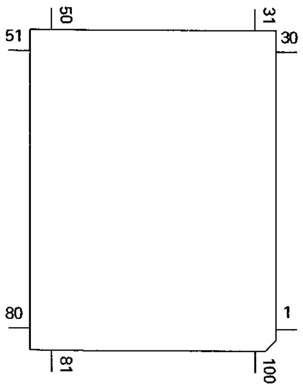

IC's marked by * are MOS type.
Be careful in handling them because they are
very liable to be damaged by electrostatic induction.

* S-81256SGUP-DIM

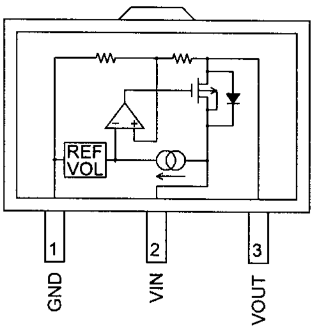

● Pin Functions (SM5903BFP)

Pin No.	Pin Name	I/O	Function and Operation
1	VDD2		Power supply terminal
2-6	UC1-UC5	I/O	Micro computer interface : Extension input / output
7	NC		Not used
8	NTEST	I	Test input
9	CLK	I	Clock input (16.9344MHz)
10	VSS		Ground terminal
11	YSRDATA	I	Audio : Serial data input
12	YLRCK	I	Audio : Serial LR clock input
13	YSCK	I	Audio : Serial bit clock input
14	ZSCK	O	Audio : Serial bit clock output
15	ZLRCK	O	Audio : Serial LR clock output
16	ZSRDATA	O	Audio : Serial data output
17	YFLAG	I	RAM over flow flag input from signal processing IC
18	YFCLK	I	Frame clock input
19	YBLKCK	I	Sub code block clock input
20	NRESET	I	System reset input
21	ZSENSE	O	Micro computer interface : Status output
22	VDD1		Power supply terminal
23	YDMUTE	I	Mute input
24	YMLD	I	Micro computer interface : Latch clock input
25	YMDATA	I	Micro computer interface : Serial data input
26	YMCLK	I	Micro computer interface : Shift clock input
27	A10	O	D-RAM : Address output
28	NCAS	O	D-RAM : $\overline{CAS}$ control output
29,30	D2,D3	I/O	D-RAM : Data input / output
31,32	D0,D1	I/O	D-RAM : Data input / output
33	NWE	O	D-RAM : $\overline{WE}$ control output
34	NRAS	O	D-RAM : $\overline{RAS}$ control output
35-40	A9-A4	O	D-RAM : Address output
41-44	A0-A3	O	D-RAM : Address output

SM5903BFP

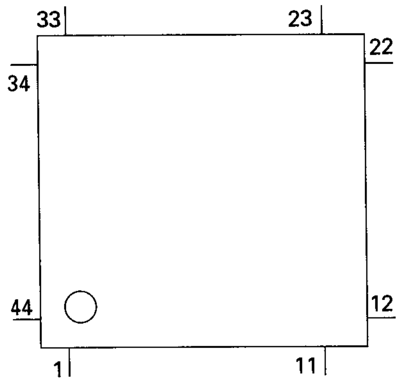

S-818A33AUC-BGN

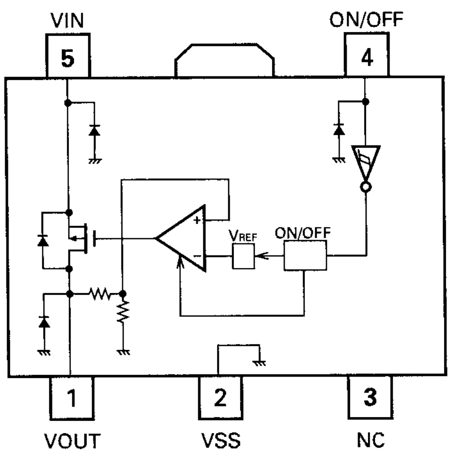

● Pin Functions (PD5748C)

Pin No.	Pin Name	I/O	Function and Operation
1	STSMO	O	STS test output
2	SPDLFG	I	Spindle FG pulse input
3	TXTSO	O	TEXT control parameter serial output
4	TXTSI	I	TEXT data serial input
5	TXTSCK	O	TEXT clock output
6	BYTE	I	VCC connected
7	CNVSS	I	VSS connected
8	POWER	O	CD : +5V control output
9	CONT	O	CD : Servo driver control output
10	RESET	I	Reset input
11	XOUT	O	Crystal oscillating element connection pin
12	VSS1		GND
13	XIN	I	Crystal oscillating element connection pin
14	VCC		Back up 5V
15	NMI	I	Pull up
16	NC		Not used
17	BRST	I	P–BUS reset input
18	TXTPACK	I	TEXT PACK interrupt input
19,20	NC	O	Not used
21	CAMOK	I	Cam operation sense 1 input
22	CAMLOAD	I	Cam operation sense 2 input
23	CAMCLMP	I	Cam operation sense 3 input
24	TESTIN	I	Test program start input
25	LOCK	I	CD : LSI spindle lock sense input
26	TXTSTB	O	TEXT parameter output
27	BRXEN	I/O	P-BUS : Reception enable input/output
28	BSRQ	O	P-BUS : Serial pole request output
29	BSO	O	P–BUS : Serial data output
30	BSI	I	P–BUS : Serial data input
31	BSCK	O	P–BUS : Clock output
32	NC	O	Not used
33	XSO	O	CD : LSI data output
34	XSI	I	CD : LSI data input
35	XSCK	O	CD : LSI clock output
36	VDCONT	O	VD control output
37	LCCONT	O	LCD drive voltage select output
38–44	NC	O	Not used
45	STSSL	O	STS IC latch output
46	NC	O	Not used
47	XAO	O	CD : LSI data discernment control signal output
48	XSTB	O	CD : LSI strobe output
49	XRST	O	CD : LSI reset output
50	CCS	O	Compression IC chip enable output
51	EPCS	I/O	EEPROM detect input , Chip select output
52	FOK	I	CD : LSI focus OK signal input
53	ELVCONT	O	ELV drive voltage select output
54–58	NC	O	Not used
59	STSWAQV	O	STS test output
60	VCC		Power supply
61	STSDEC	O	STS test output
62	VSS2		GND
63	STSENC	O	STS test output
64	STSSTD	O	STS test output
65	STSSTC	O	STS test output
66	STSSTB	O	STS test output
67	STSSTA	O	STS test output
68–71	NC	O	Not used

Pin No.	Pin Name	I/O	Function and Operation
72	HOME2	I	Disc clamp claw sense input
73	SBSY	I	Sub code synchronous interrupt signal input
74	CDMUTE	O	CD : Mute output
75	LO2	O	LOAD motor control 2 output
76	LO1	O	LOAD motor control 1 output
77	ELV2	O	ELV Motor control 2 output
78	ELV1	O	ELV Motor control 1 output
79	HOME	I	Carriage home switch input
80	STS16M	I	STS DRAM 4M/16M(H) select input
81	LOADSW1	I	LOAD operation sense 1 input
82	LOADSW2	I	LOAD operation sense 2 input
83,84	NC		Not used
85	$\overline{ADENA}$	O	AVREF enable output
86	CG1	O	Cam motor 1 output
87	CG2	O	Cam motor 2 output
88	LOADVOL2	I	LOAD voltage sense 2 input
89	LOADPHT	I	LOAD operation photo sense input
90	LOMMON	O	Not used
91	ELVSENS	I	ELV position select input
92	EREFF		ELV sense reference voltage
93	TEMP	I	CD : Temperature sense input
94	AVSS		A/D converter ground potential
95	VDIN	I	CD : Power supply short sensor input
96	VREF	I	A/D converter reference voltage input
97	AVCC		A/D converter ground
98	STSSI	I	STS IC data input
99	STSSO	O	STS IC data output
100	STSSCK	O	STS IC clock output

* PD5748C

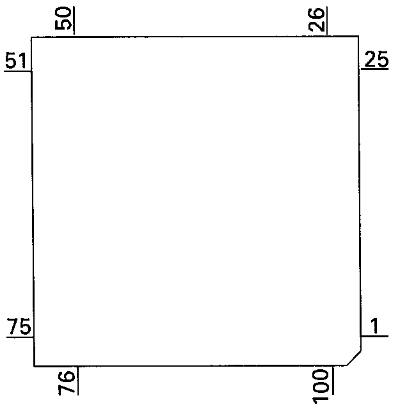

BA6849FS

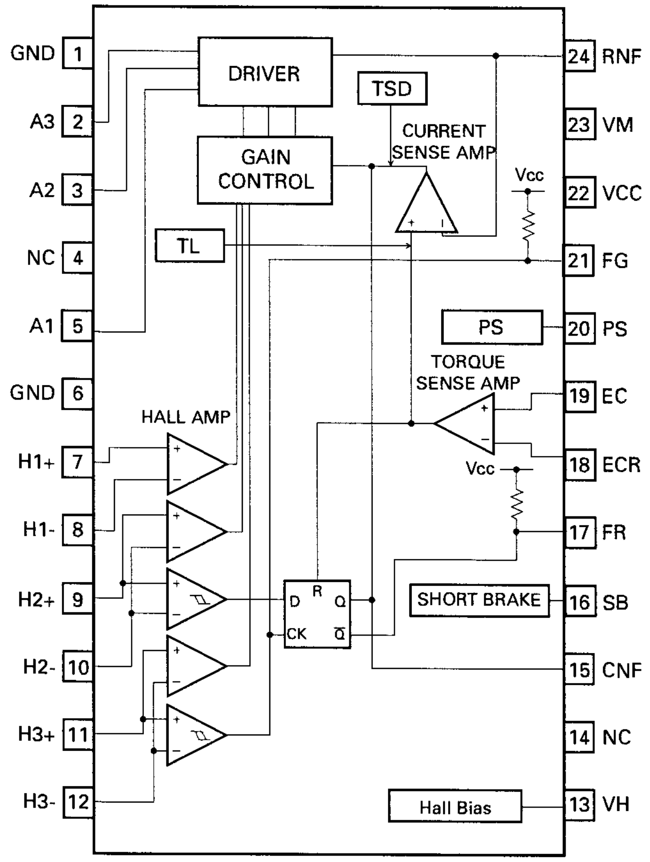

* MSM51V17400F6TFT

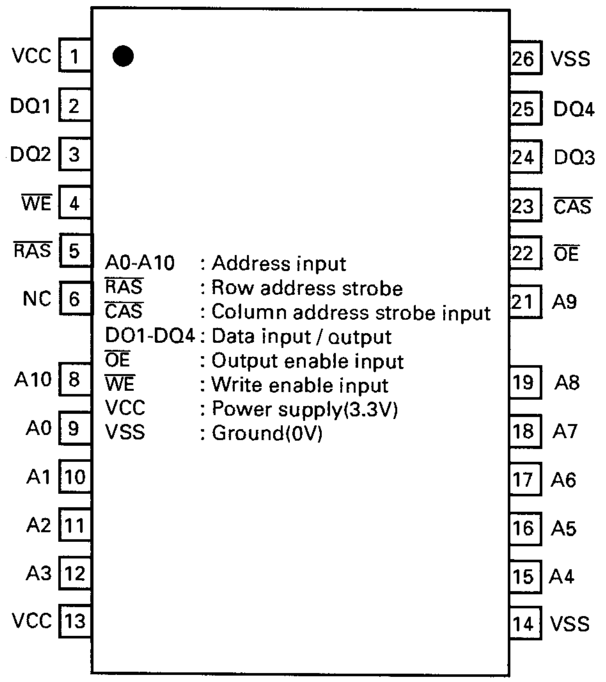

BD7962FM

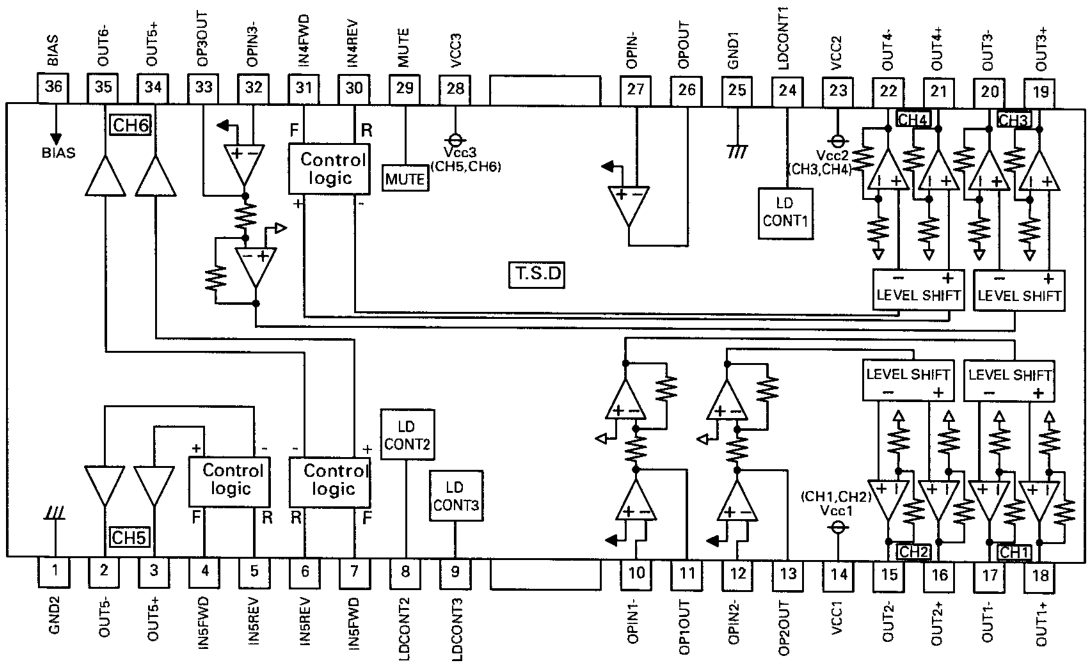

● FM/AM Tuner Unit

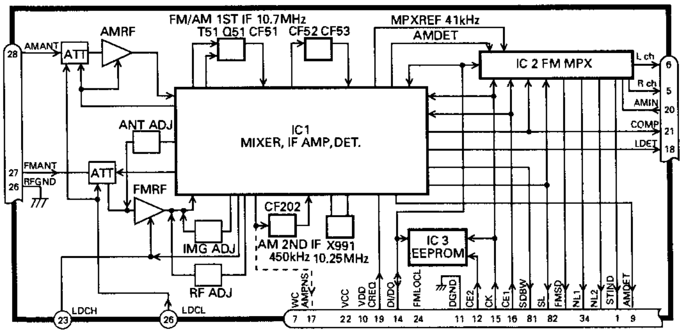

No.	Symbol	I/O	Explain	
1	STIND	O	stereo indicator	"Low" when the FM stereo signals are received. To be pulled up to the "VDD" at 47kΩ.
2	FMSD	O	FM station detector	"High" when signals are received. To be pulled up to the "VDD" at 47kΩ Meanwhile, 10kΩ should be used when taking diver FIX trigger from here and "High: 0.9VDD or more" and "Low: 250mV or less". (Should satisfy the diver IC specifications)
3	NL1	O	noise level-1	"High" when noise is received. Output for the RDS. GND at 47kΩ//1,800pF.
4	NL2	O	noise level-2	"High" when noise is received. Output for the RDS. GND at 36kΩ//330pF.
5	Rch	O	R channel output	FM stereo "R-ch" signal output or AM audio output. Add the specified de-emphasis constant.
6	Lch	O	L channel output	FM stereo "L-ch" signal output or AM audio output. Add the specified de-emphasis constant.
7	WC		write control	EEPROM write control. Writing permissible at "Low". Normally open.
8	SDBW	O	SD bandwidth	SD bandwidth signal output. For detection of detuning data for the RDS.
9	AMDET	O	AM detector output	AM detector output. r out < 100Ω
10	VDD		power supply	Power supply pin for the digital section. DC 5V +/- 0.25V. Be careful about overlapping noise in the logic section.
11	DGND		digital ground	Grounding for the digital section.
12	CE2	I	chip enable-2	EEPROM chip enable. Active a "Low" To be pulled up to the "VDD" at 47kΩ
13	SL	I/O	signal level	Received FM/AM signal level (strength) output. Connect the specified load resistor and capacitor (10k Ω+ 39k Ω//4,700pF)
14	DI/DO	I/O	data input/ data output	Data input/Data output To be pulled up to the "VDD" at 47kΩ
15	CK	I	clock	Clock input To be pulled up to the "VDD" at 47kΩ
16	CE1	I	chip enable-1	AF-RF chip enable. Active at "High"To be grounded at 47kΩ
17	AMPNS	O	AM PNS IF signal	IF signal output for AM PNS circuit.
18	LDET	O	lock detector	Active at "Low". To be pulled up to the "VDD" at 47kΩ
19	CREQ	I	current request	Active at "Low". To be grounded at 47kΩ
20	AMINI		AM audio input	The frequency response and the level are set by connecting an external CR network with terminal AMIN as terminal AMDET. r in = 50kΩ
21	COMP	O	composite signal	FM composite signal output. r out < 100Ω
22	VCC		power supply	Analog section power supply pin.DC 8.4V +/- 0.3V
23	LOCH	I	local high	FM local high pin. When seeking local high, apply 5V together with "LOCL".
24	FMLOCL	I	FM local low	FM local low pin. When seeking local low, apply 5V to the base of the NPN transistor with which the specified resistor is being connected to the emitter. Keep it open in case of ordinary marketed models.
25	LOCL	I	local low	FM/AM local low pin. When seeking local low, apply 5V to the base of the NPN transistor.Since this pin is exclusive for AM when the FMLOCL is in use, do not drive it under FM.
26	RFGND		RF ground	Grounding for the antenna section.
27	FMANT	I	FM antenna input	FM antenna input. 75Ω. Surge absorber (DSP-201M-S00B) is necessary.
28	AMANT	I	AM antenna input	AM antenna input. High impedance. Connect to the antenna through an L (LAU type) of 4.7μH.To cope with the power transmission line hums, insert a series circuit consisting of an L (a coil of about 100mH) + R (a resistor of 470 Ω to 2.2kΩ) between the GND.

7.2.2 DISPLAY

● **LCD(CAW1700)**

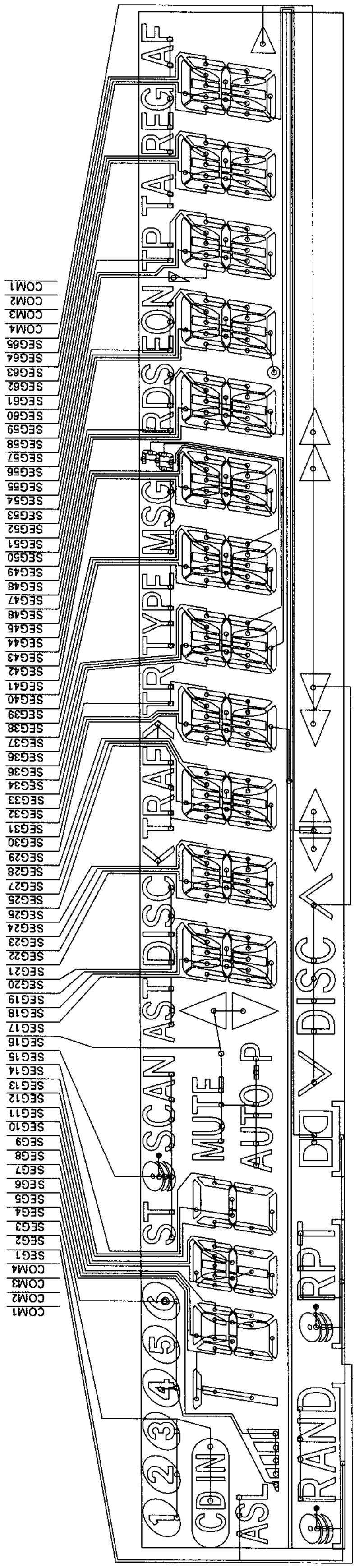

SEGMENT

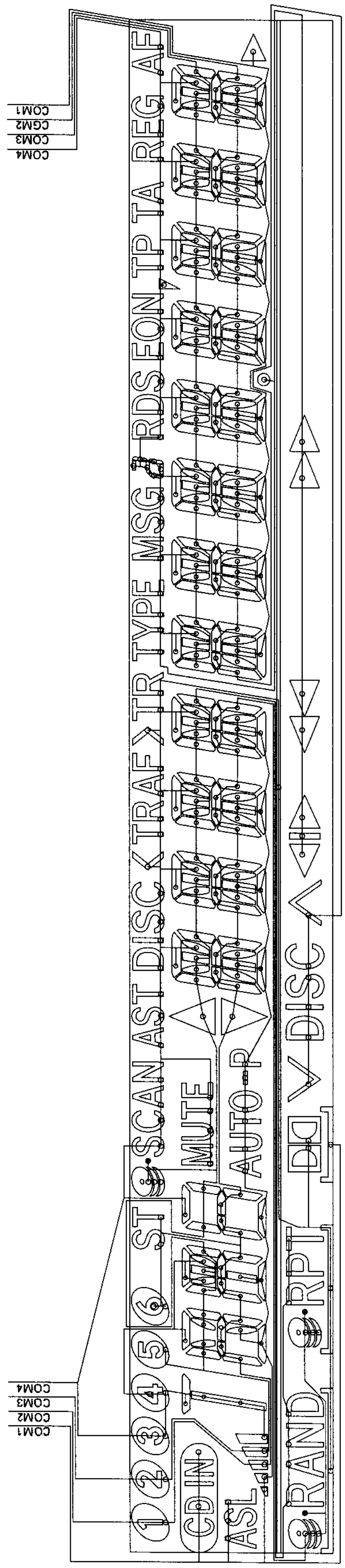

COMMON

7.3 EXPLANATION
7.3.1 SYSTEM BLOCK DIAGRAM

● **System 1**

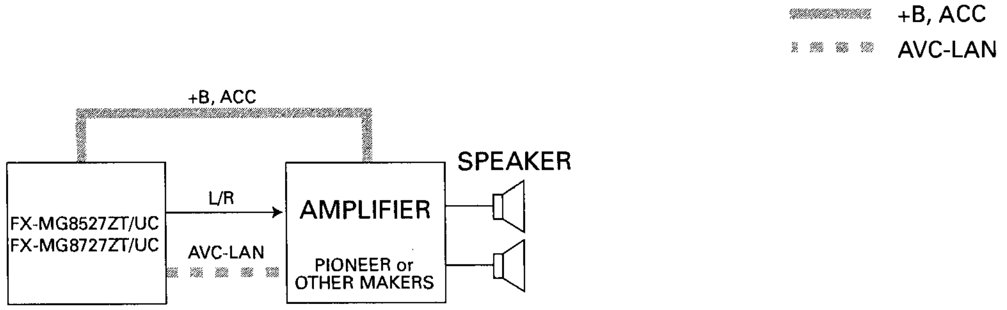

● **System 2**

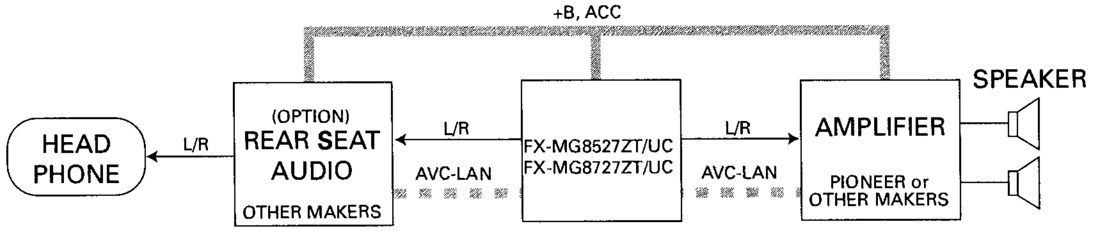

● **System 3**

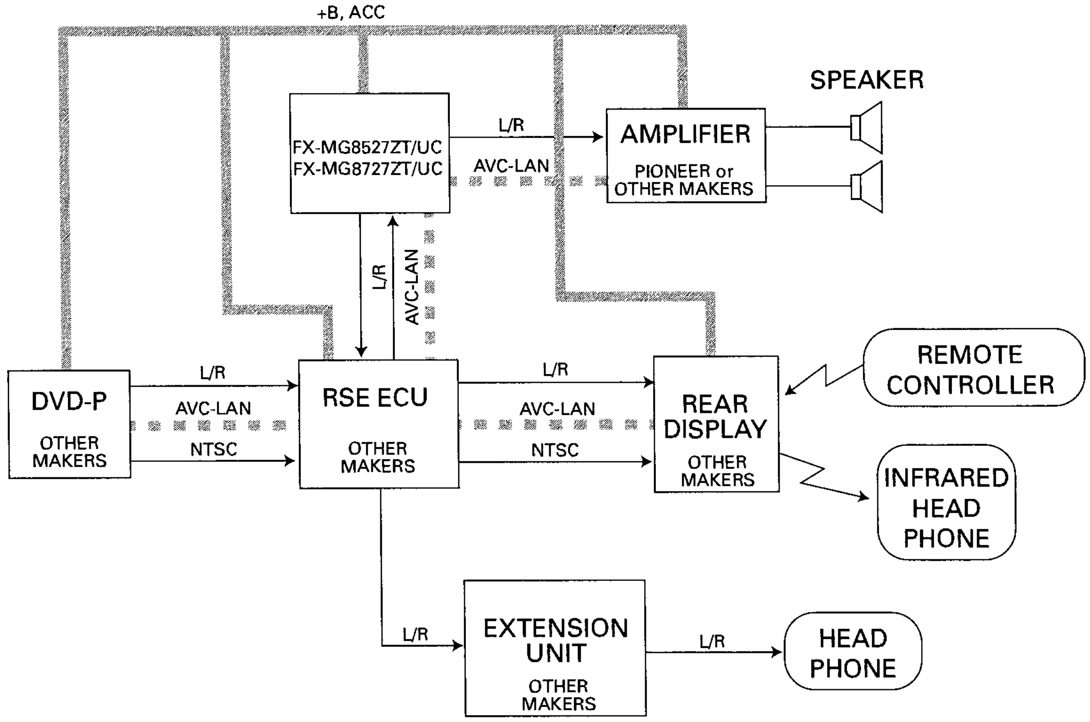

7.3.2 OPERATIONAL FLOW CHART

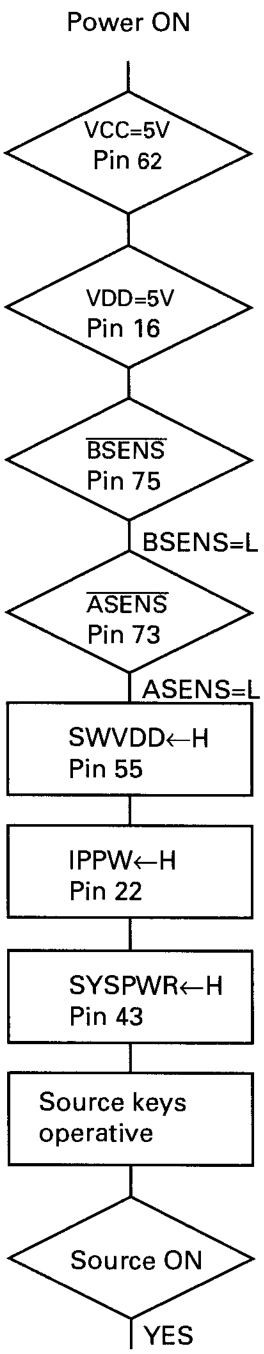

Completes power-on operation.
(After that, proceed to each source operation)

7.4 NOTES ON SERVICINO
7.4.1 CLEANINO

Before shipping out the product, be sure to clean the following portions by using the prescribed cleaning tools:

Portions to be cleaned	Cleaning tools
CD pickup lenses	Cleaning liquid : GEM1004 Cleaning paper : GED-008

Portions to be cleaned	Cleaning tools
Cassette heads Pinch rollers Capstans	Cleaning paper : GED-008

7.4.2 FACTORY SETTINOS

● When the Repair is Complete

When the Repair is Complete, make the CD mechanism ready for transportation.

Turning on "Shipment mode"
(to prevent damage during shipment)

•Remove all discs loaded in this product, before disconnecting the power supply connector .

•Set this product to the "Shipment mode" and then disconnect the power supply connector before shipping.

•Setting the "Shipment mode"

•Switch ACC OFF, and then, while simultaneously pressing the "SEEK UP" (or "TUNE UP") and "DISC"buttons, switch ACC ON.

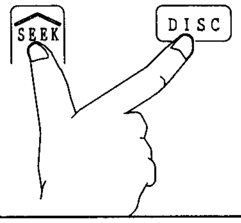

•Confirming "Shipment mode" setting

•During Shipment mode setting the CD loading door indicator flashes. when shipment mode setting is completed, it stays lit. (If the redio unit itself has a display, "SHIP" is indicated.)
•After disconnecting the power supply connector and removing this product, confirm that you can see a metal plate through the hole near the "SHIP" mark on the rear chassis.
•Confirm that the door of the CD player is closed.

8. OPERATIONS

● **FX-MG8527ZT/UC**

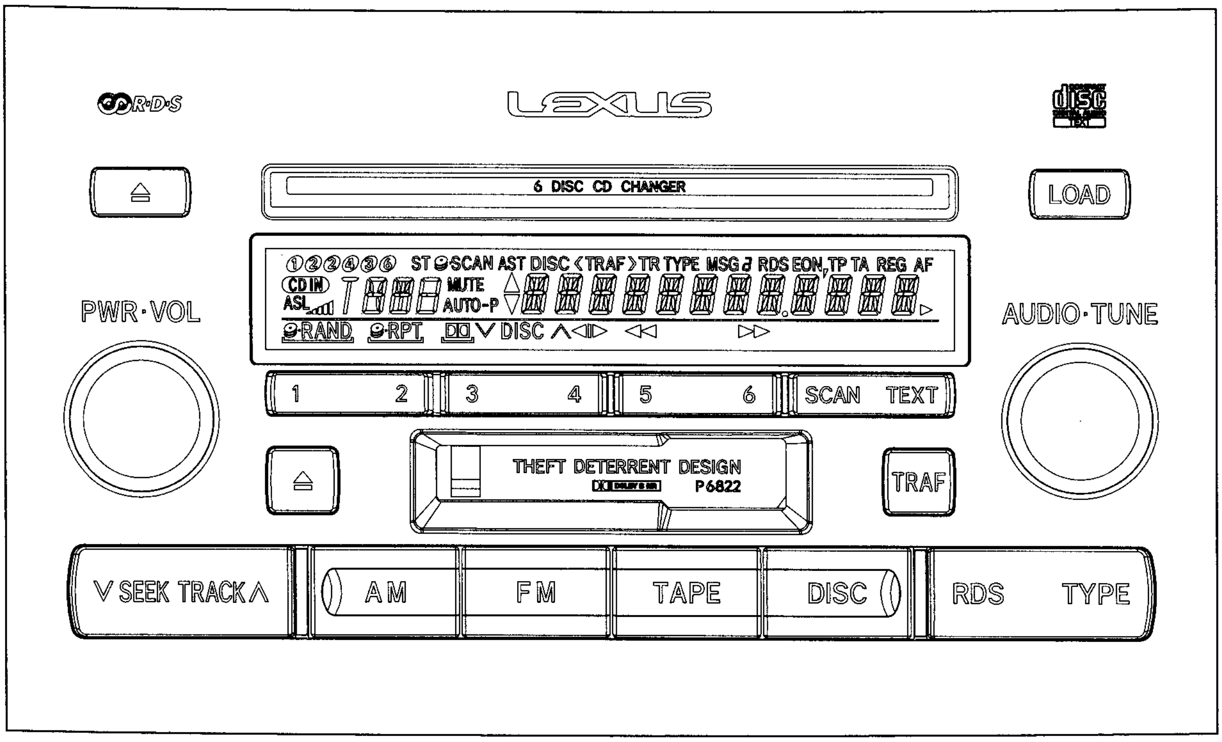

● **FX-MG8727ZT/UC**

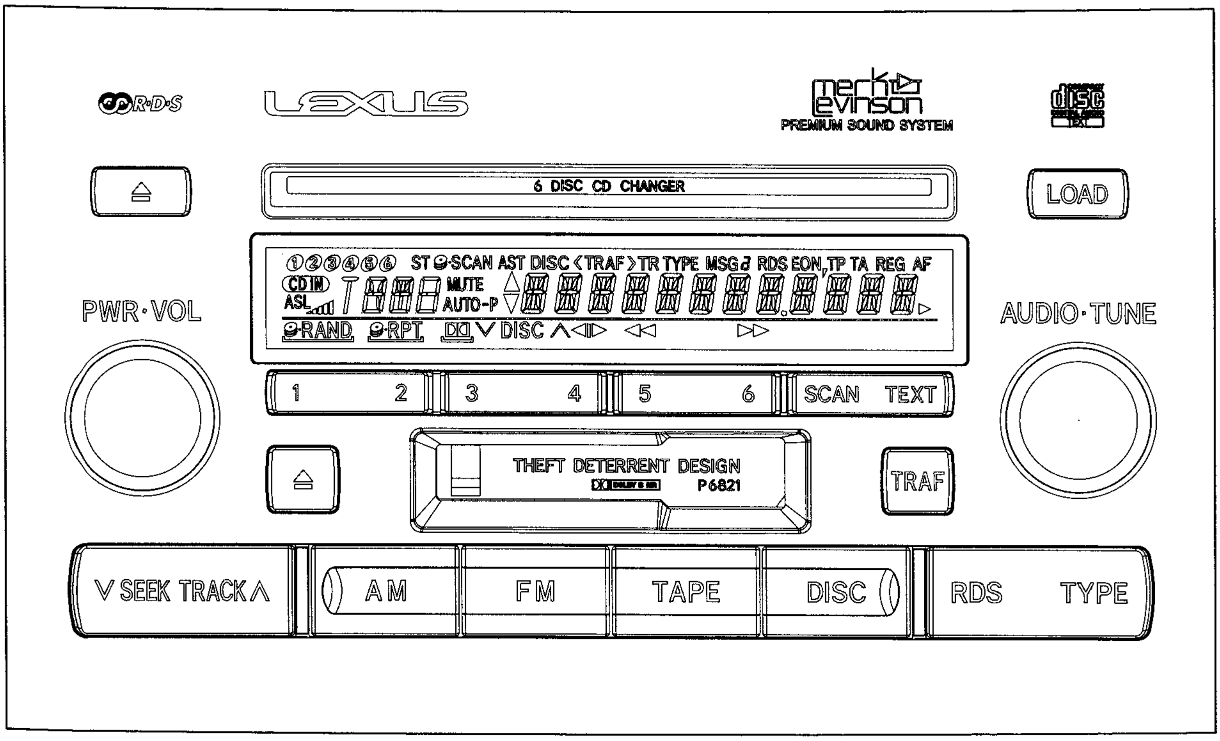

● RADIO(FX-MG8527ZT/UC)

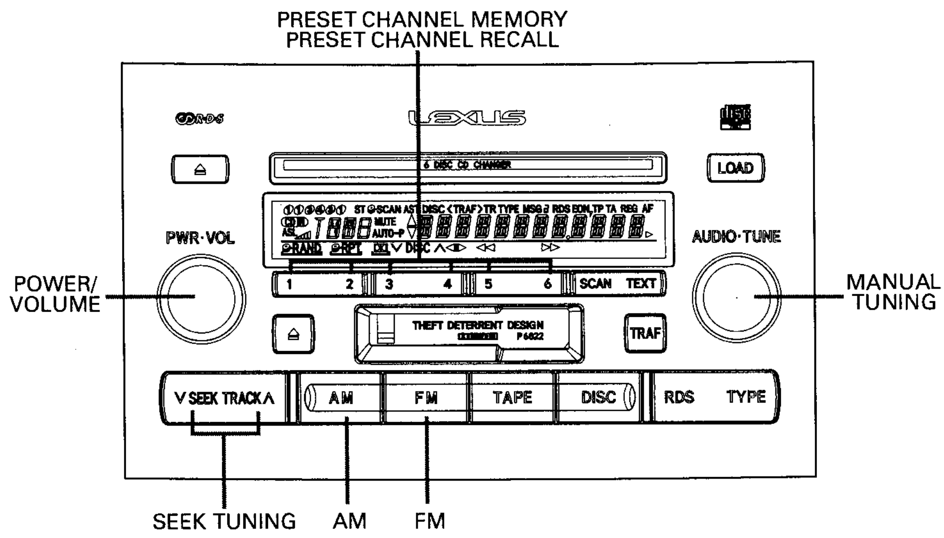

● CD(FX-MG8527ZT/UC)

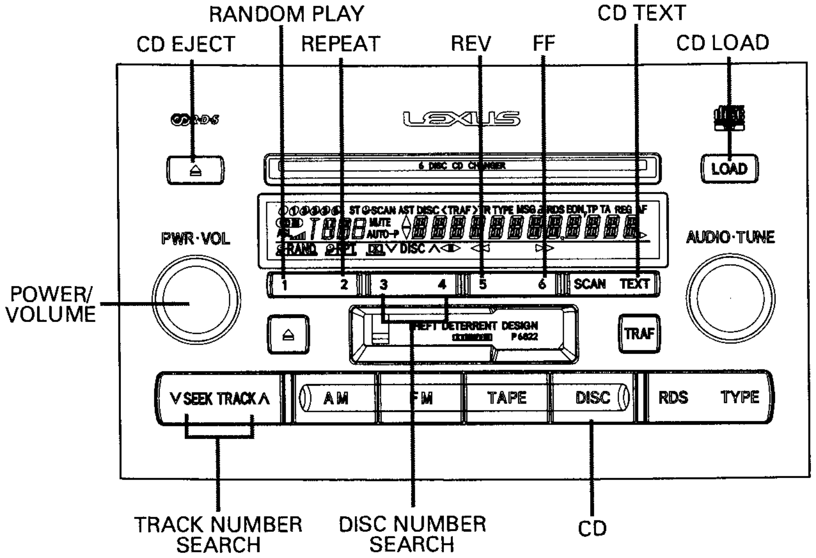

● CASSETTE(FX-MG8527ZT/UC)

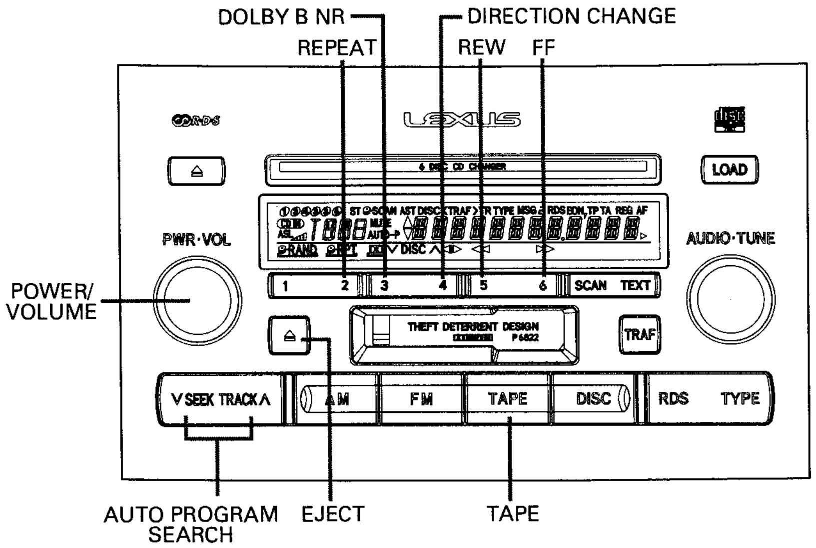

PIONEER CORPORATION 4-1, Meguro 1-chome, Meguro-ku, Tokyo 153-8654, Japan
PIONEER ELECTRONICS (USA) INC. P.O. Box 1760, Long Beach, CA 90801-1760, U.S.A.
PIONEER EUROPE NV Haven 1087, Keetberglaan 1, 9120 Melsele, Belgium
PIONEER ELECTRONICS ASIACENTRE PTE. LTD. 253 Alexandra Road, #04-01, Singapore 159936
©PIONEER CORPORATION 2002
K-ZZD.AUG. 2002 Printed in Japan